Data sheet

Current monitoring relays CM-SRS.1
For single-phase AC/DC currents

The CM-SRS.1 is an electronic current monitoring relay that protects single-phase mains (DC or AC) from over- and undercurrent from 3 mA to 15 A.

All devices are available with two different terminal versions. You can choose between the proven screw connection technology (double-chamber cage connection terminals) and the completely tool-free Easy Connect Technology (Push-in terminals).



Characteristics

- Monitoring of DC and AC currents (3 mA to 15 A)
- TRMS measuring principle
- One device includes 3 measuring ranges
- Over- or undercurrent monitoring configurable
- Hysteresis adjustable (3-30 %)
- 3 control supply voltage versions
- Precise adjustment by front-face operating controls
- Screw connection technology or Easy Connect Technology available
- Housing material for highest fire protection classification UL 94 V-0
- Tool-free mounting on DIN rail as well as demounting
- 1 c/o (SPDT) contact
- 22.5 mm (0.89 in) width
- 3 LEDs for status indication

Approvals

	UL 508, CAN/CSA C22.2 No.14	
	GL	(pending)
	GOST	
	CB Scheme	
	CCC	
	RMRS	

Marks

CE	CE
	C-Tick

Power and productivity for a better world™

Order data

Current monitoring relays

Type	Rated control supply voltage	Connection technology	Measuring ranges	Order code
CM-SRS.11P	24-240 V AC/DC	Push-in terminals	3-30 mA, 10-100 mA, 0.1-1 A	1SVR 740 840 R0200
	110-130 V AC			1SVR 740 841 R0200
	220-240 V AC			1SVR 740 841 R1200
CM-SRS.11S	24-240 V AC/DC	Screw type terminals	3-30 mA, 10-100 mA, 0.1-1 A	1SVR 730 840 R0200
	110-130 V AC			1SVR 730 841 R0200
	220-240 V AC			1SVR 730 841 R1200
CM-SRS.12S	24-240 V AC/DC	Screw type terminals	0.3-1.5 A, 1-5 A, 3-15 A	1SVR 730 840 R0300
	110-130 V AC			1SVR 730 841 R0300
	220-240 V AC			1SVR 730 841 R1300

Accessories

Type	Description	Order code
ADP.01	Adapter for screw mounting	1SVR 430 029 R0100
MAR.12	Marker label for devices with DIP switches	1SVR 730 006 R0000
COV.11	Sealable transparent cover	1SVR 730 005 R0100

Connection technology

Maintenance free Easy Connect Technology with Push-in terminals

Type designation CM-xxS.yyP

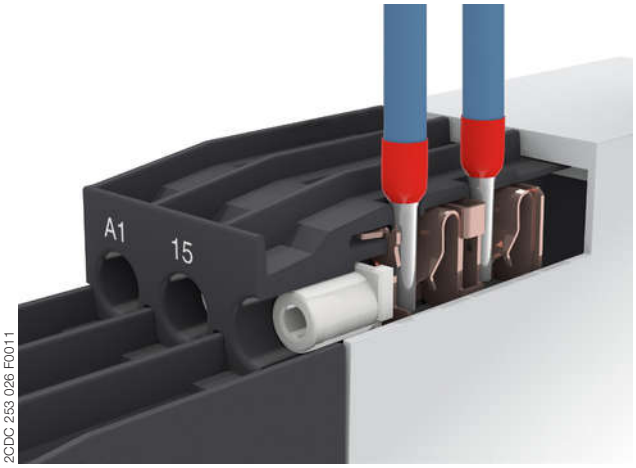

2CDC 253 026 F0011

Push-in terminals

- Tool-free connection of rigid and flexible wires with wire end ferrule according to DIN 46228-1-A, DIN 46228-4-E
  Wire size: 2 x 0.5-1.5 mm², (2 x 20 - 16 AWG)
- Easy connection of flexible wires without wire end ferrule by opening the terminals
- No retightening necessary
- One operation lever for opening both connection terminals
- For triggering the lever and disconnecting of wires you can use the same tool (Screwdriver according to DIN ISO 2380-1 Form A 0.8 x 4 mm (0.0315 x 0.157 in), DIN ISO 8764-1 PZ1 ø 4.5 mm (0.177 in))
- Constant spring force on terminal point independent of the applied wire type, wire size or ambient conditions (e. g. vibrations or temperature changes)
- Opening for testing the electrical contacting
- Gas-tight

Approved screw connection technology with double-chamber cage connection terminals

Type designation CM-xxS.yyS

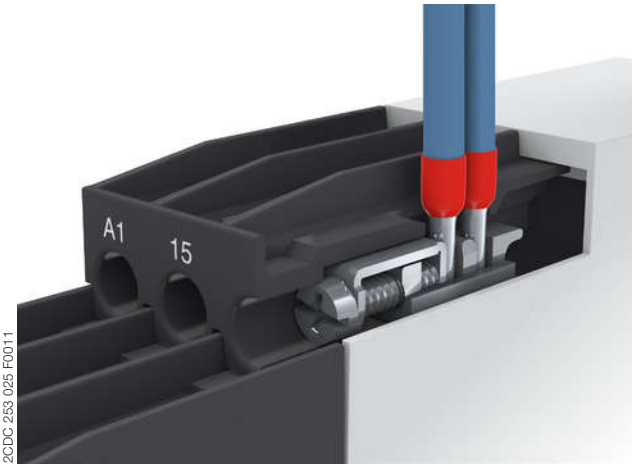

2CDC 253 025 F0011

Double-chamber cage connection terminals

- Terminal spaces for different wire sizes:
  fine-strand with/without wire end ferrule:
  1 x 0.5-2.5 mm² (2 x 20 - 14 AWG),
  2 x 0.5-1.5 mm² (2 x 20 - 16 AWG)
  rigid:
  1 x 0.5-4 mm² (1 x 20 - 12 AWG),
  2 x 0.5-2.5 mm² (2 x 20 - 14 AWG)
- One screw for opening and closing of both cages
- Pozidrive screws for pan- or crosshead screwdrivers according to DIN ISO 2380-1 Form A 0.8 x 4 mm (0.0315 x 0.157 in), DIN ISO 8764-1 PZ1 ø 4.5 mm (0.177 in)

Both the Easy Connect Technology with Push-in terminals and screw connection technology with double-chamber cage connection terminals have the same connection geometry as well as terminal position.

Functions

Operating controls

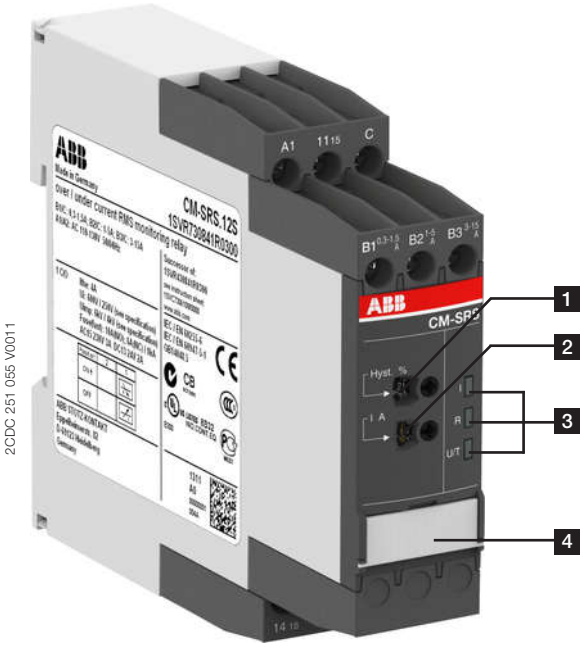

1 **Adjustment of the hysteresis (MIN = Default)**

2 **Adjustment of the threshold value (MIN = Default)**

3 **Indication of operational states**

U/T: green LED – control supply voltage

R: yellow LED – relay status

U: red LED – over- / undercurrent

4 **DIP switches (see DIP switch functions)**

Application

The current monitoring relays CM-SRS.1 are designed for use in single-phase AC and/or DC systems for over- or undercurrent monitoring. The devices are available with different supply voltage ranges and work according to the open-circuit principle.

Operating mode

The CM-SRS.1 with 1 c/o (SPDT) contact are available in 2 versions with 3 measuring ranges: 3-30 mA, 10 100 mA, 0.1-1 A (CM-SRS.11) and 0.3-1.5 A, 1-5 A, 3-15 A (CM-SRS.12). The measuring range is selected by connecting the monitored wire to the corresponding terminal B1/B2/B3-C.

The units are adjusted with front-face operating controls. The selection of over- or undercurrent monitoring is made with a DIP switch. Potentiometers, with direct reading scale, allow the adjustment of the threshold value I and of the hysteresis %. The hysteresis % is adjustable within a range of 3 to 30 % of the threshold value.

Function diagrams

Overcurrent monitoring

The current to be monitored (measured value) is applied to terminals B1/B2/B3-C. The control supply voltage applied to terminals A1-A2 is displayed by the glowing green LED.

If the measured value exceeds the adjusted threshold value, the output relay energizes and the red LED (overcurrent) and the yellow LED (relay energized) glow.

If the measured value drops below the threshold value minus the adjusted hysteresis, the output relay de-energizes and the red and yellow LEDs turn off.

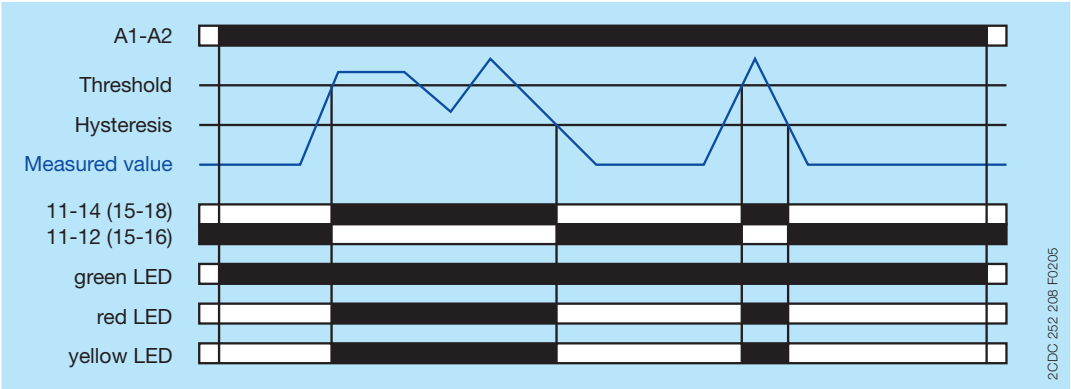

Undercurrent monitoring

The current to be monitored (measured value) is applied to terminals B1/B2/B3-C. The control supply voltage applied to terminals A1-A2 is displayed by the glowing green LED.

If the measured value drops below the adjusted threshold value, the output relay energizes, the red LED flashes (undercurrent) and the yellow LED (relay energized) glows.

If the measured value exceeds the threshold value plus the adjusted hysteresis, the output relay de-energizes and the red and yellow LEDs turn off.

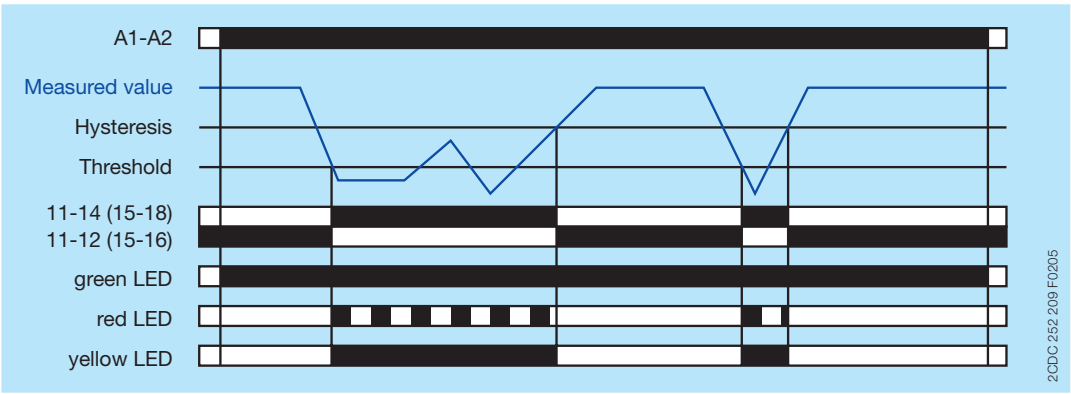

Electrical connection

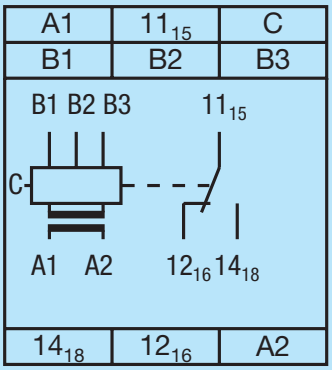

A1-A2	Rated control supply voltage	
B1-C	Measuring range 1:	CM-SRS.11: 3-30 mA CM-SRS.12: 0.3-1.5 A
B2-C	Measuring range 2:	CM-SRS.11: 10-100 mA CM-SRS.12: 1-5 A
B3-C	Measuring range 3:	CM-SRS.11: 0.1-1 A CM-SRS.12: 3-15 A
11_{15}-12_{16}/14_{18}	Output contact - open-circuit principle	

Connection diagram

DIP switches

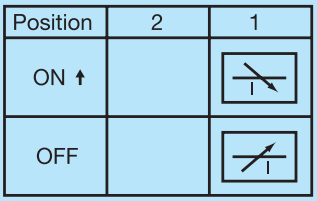

1	ON	Undercurrent monitoring
	OFF	Overcurrent monitoring

OFF = Default

Technical data

Data at T_a = 25 °C and rated values, unless otherwise indicated

Input circuits

Supply circuit		**A1-A2**		
Rated control supply voltage U_s		110-130 V AC	220-240 V AC	24-240 V AC/DC
Rated control supply voltage U_s tolerance		-15...+10 %		
Rated frequency		50/60 Hz		50/60 Hz or DC
Typical current / power consumption	24 V DC	-	-	30 mA / 0.75 W
	115 V AC	24 mA / 2.6 VA	-	17 mA / 1.9 VA
	230 V AC	-	12 mA / 2.6 VA	11 mA / 2.6 VA
Power failure buffering time		20 ms		
Transient overvoltage protection		varistors		

Measuring circuit		**B1/B2/B3-C**					
Monitoring function		over- or undercurrent monitoring configurable					
Measuring method		TRMS measuring principle					
Measuring inputs		CM-SRS.11			CM-SRS.12		
	terminal connection	B1-C	B2-C	B3-C	B1-C	B2-C	B3-C
	measuring range	3-30 mA	10-100 mA	0.1-1 A	0.3-1.5 A	1-5 A	3-15 A
	input resistance	3.3 Ω	1 Ω	0.1 Ω	0.05 Ω	0.01 Ω	0.0025 Ω
	pulse overload capacity t < 1 s	500 mA	1 A	10 A	1 A	50 A	100 A
	continuous capacity	50 mA	150 mA	1.5 A	2 A	7 A	17 A
Threshold value		adjustable within the indicated measuring range					
Tolerance of the adjusted threshold value		10 % of the range end value					
Hysteresis related to the threshold value		3-30 % adjustable					
Measuring signal frequency range		DC / 15 Hz - 2 kHz					
Rated measuring signal frequency range		DC / 50-60 Hz					
Maximum response time	AC	80 ms					
	DC	120 ms					
Accuracy within the rated control supply voltage tolerance		ΔU ≤ 0.5 %					
Accuracy within the temperature range		ΔU ≤ 0.06 % / °C					

Timing circuit	
Time delay T_V	none
Repeat accuracy (constant parameters)	±0.07 % of full scale
Tolerance of the adjusted time delay	-
Accuracy within the rated control supply voltage tolerance	-
Accuracy within temperature range	-

User interface

Indication of operational states		
Control supply voltage	U/T: green LED	⎍: control supply voltage applied
Measured value	U: red LED	⎍: overcurrent ⎍⎍: undercurrent
Relay status	R: yellow LED	⎍: output relay energized

Output circuits

Kind of output	11_{15}-12_{16}/14_{18}	relay, 1 c/o (SPDT) contact
Operating principle		open-circuit principle (output relay energizes if the measured value exceeds ⊣/ / falls below ⊣\ the adjusted threshold value)
Contact material		AgNi
Rated operational voltage U_e (VDE 0110, IEC/EN 60947-1)		250 V
Minimum switching voltage / Minimum switching current		24 V / 10 mA
Maximum switching voltage / Maximum switching current		250 V AC / 4 A AC
Rated operational current I_e (IEC/EN 60947-5-1)	AC12 (resistive) at 230 V	4 A
	AC15 (inductive) at 230 V	3 A
	DC12 (resistive) at 24 V	4 A
	DC13 (inductive) at 24 V	2 A
AC rating (UL 508)	utilization category (Control Circuit Rating Code)	B 300
	max. rated operational voltage	300 V AC
	max. continuous thermal current at B 300	5 A
	max. making/breaking apparent power at B 300	3600/360 VA
Mechanical lifetime		30 x 10^6 switching cycles
Electrical lifetime	AC12, 230 V, 4 A	0.1 x 10^6 switching cycles
Maximum fuse rating to achieve short-circuit protection	n/c contact	6 A fast-acting
	n/o contact	10 A fast-acting

General data

MTBF				on request	
Duty time				100 %	
Dimensions (W x H x D)			product dimensions	22,5 x 85,6 x 103,7 mm (0,89 x 3,37 x 4,08 in)	
			packaging dimensions	97 x 109 x 30 mm (3,82 x 4,29 x 1,18 in)	
Weight				**Screw connection technology**	**Easy Connect Technology (Push-in)**
	net weight	CM-SRS.11	Version 24-240 V AC/DC	0.145 kg (0.320 lb)	0.137 kg (0.302 lb)
			Version 110-130 V AC	0.161 kg (0.355 lb)	0.153 kg (0.337 lb)
			Version 220-240 V AC	0.161 kg (0.355 lb)	0.153 kg (0.337 lb)
		CM-SRS.12	Version 24-240 V AC/DC	0.137 kg (0.302 lb)	-
			Version 110-130 V AC	0.168 kg (0.370 lb)	-
			Version 220-240 V AC	0.168 kg (0.370 lb)	-
	gross weight	CM-SRS.11	Version 24-240 V AC/DC	0.147 kg (0.324 lb)	0.159 kg (0.351 lb)
			Version 110-130 V AC	0.183 kg (0.403 lb)	0.175 kg (0.386 lb)
			Version 220-240 V AC	0.183 kg (0.403 lb)	0.175 kg (0.386 lb)
		CM-SRS.12	Version 24-240 V AC/DC	0.159 kg (0.351 lb)	-
			Version 110-130 V AC	0.200 kg (0.441 lb)	-
			Version 220-240 V AC	0.200 kg (0.441 lb)	-
Mounting				DIN rail (IEC/EN 60715), snap-on mounting without any tool	
Mounting position				any	
Minimum distance to other units				10 mm (0.39 in) at measured current > 10 A	
Material of housing				UL 94 V-0	
Degree of protection			housing	IP50	
			terminals	IP20	

Electrical connection

		Screw connection technology	Easy Connect Technology (Push-in)
Wire size	fine-strand with(out) wire end ferrule	1 x 0.5-2.5 mm² (1 x 20-14 AWG) 2 x 0.5-1.5 mm² (2 x 20-16 AWG)	2 x 0.5-1.5 mm² (2 x 20-16 AWG)
	rigid	1 x 0.5-4 mm² (1 x 20-12 AWG) 2 x 0.5-2.5 mm² (2 x 20-14 AWG)	2 x 0.5-1.5 mm² (2 x 20-16 AWG)
Stripping length		8 mm (0.32 in)	
Tightening torque		0.6 - 0.8 Nm (5.31 - 7.08 lb.in)	-

Environmental data

Ambient temperature ranges	operation	-20...+60 °C
	storage	-40...+85 °C
Damp heat (IEC 60068-2-30)		55 °C, 6 cycle
Vibration, sinusoidal (IEC/EN 60255-21-1)		Class 2
Shock (IEC/EN 60255-21-2)		Class 2

Isolation data

Rated insulation voltage U_i (VDE 0110, IEC/EN 60947-1, IEC/EN 60255-5)	supply / measuring circuit / output	600 V
	supply / output 1 / output 2	250 V
Rated impulse withstand voltage U_{imp} (IEC/EN 60947-1, IEC/EN 60255-5)	supply / measuring circuit / output	6 kV 1.2/50 µs
	supply / output 1 / output 2	4 kV 1.2/50 µs
Test voltage between all isolated circuits (type test)	rated insulation voltage 250 V	2.0 kV, 50 Hz
	rated insulation voltage 600 V	2.5 kV, 50 Hz
Pollution degree (VDE 0110, IEC/EN 60664, IEC/EN 60255-5)		3
Overvoltage category (VDE 0110, IEC/EN 60664, IEC/EN 60255-5)		III

Standards

Product standard	IEC/EN 60255-6
Low Voltage Directive	2006/95/EC
EMC Directive	2004/108/EC
RoHS Directive	2002/95/EC

Electromagnetic compatibility

Interference immunity to		IEC/EN 61000-6-2
electrostatic discharge	IEC/EN 61000-4-2	Level 3
radiated, radio-frequency, electromagnetic field	IEC/EN 61000-4-3	Level 3
electrical fast transient / burst	IEC/EN 61000-4-4	Level 3
surge	IEC/EN 61000-4-5	Level 3
conducted disturbances, induced by radio-frequency fields	IEC/EN 61000-4-6	Level 3
Interference emission		IEC/EN 61000-6-3
high-frequency radiated	IEC/CISPR 22, EN 55022	Class B
high-frequency conducted	IEC/CISPR 22, EN 55022	Class B

Technical diagrams

Load limit curves

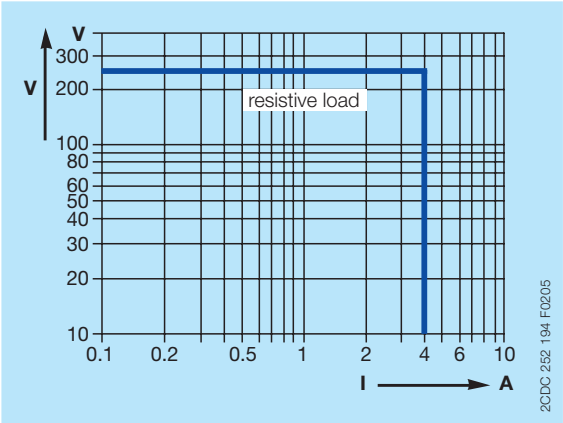

AC load (resistive)

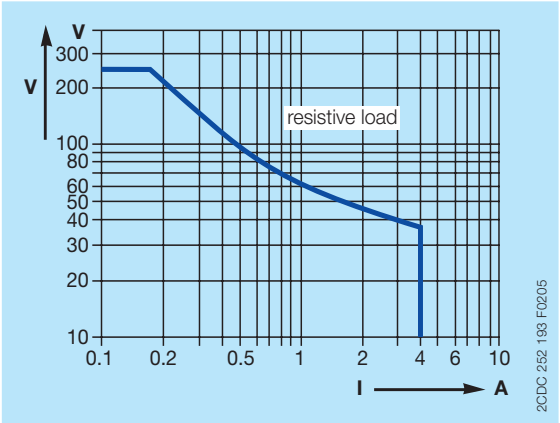

DC load (resistive)

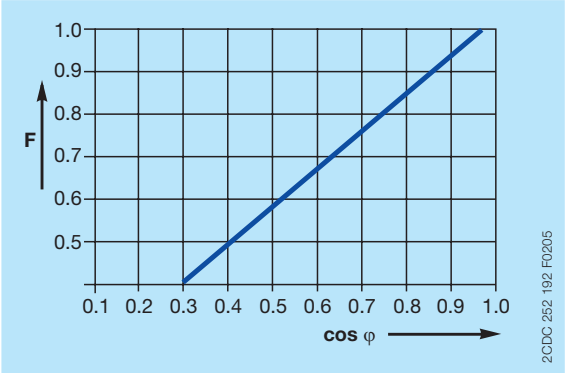

Derating factor F for inductive AC load

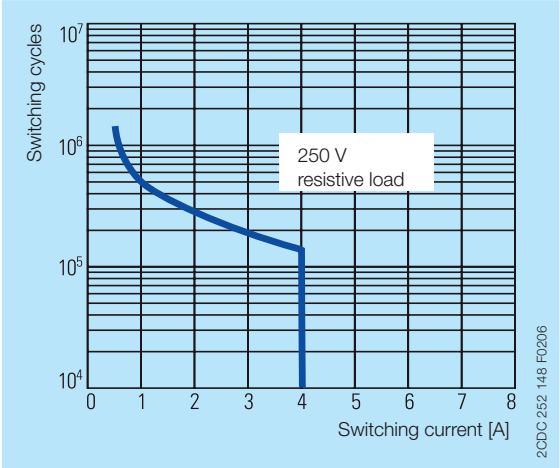

Contact lifetime

Dimensions

in **mm** and *inches*

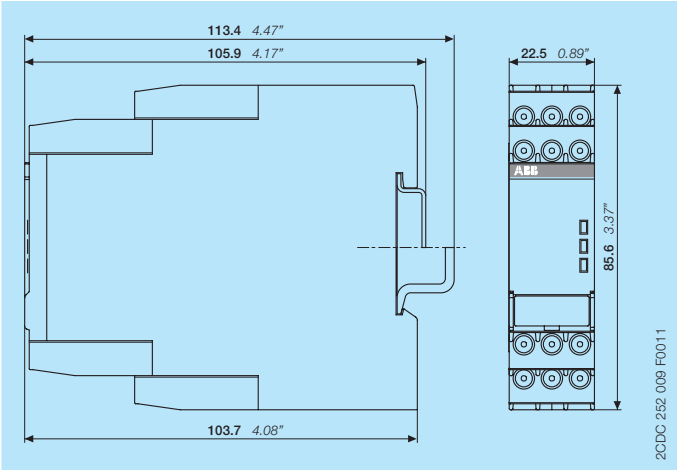

Accessories

in **mm** and *inches*

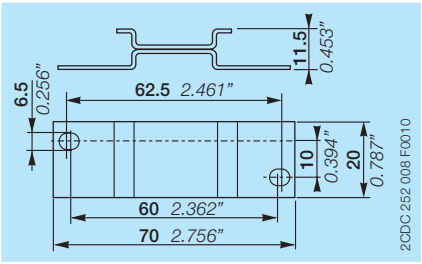

ADP.01 - Adapter for screw mounting

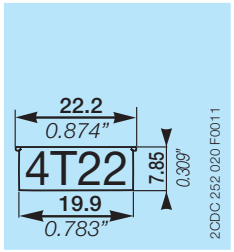

MAR.12 - Marker label for devices with DIP switches

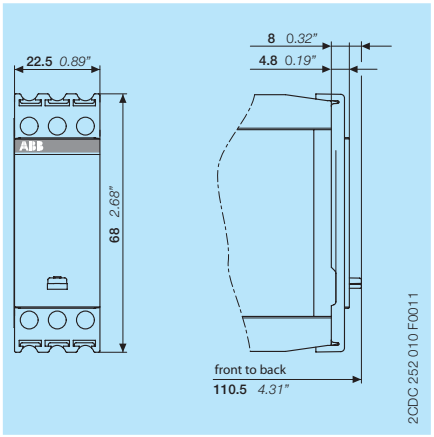

COV.11 - Sealable transparent cover

Further documentation

Document title	Document type	Document number
Electronic products and relays	Technical catalogue	2CDC 110 004 C020x
CM-SRS.1, CM-SRS.2	Instruction manual	1SVC 730 610 M0000

You can find the documentation on the internet at www.abb.com/lowvoltage -> Control Products -> Electronic Relays and Controls -> Single Phase Monitors

Contact us

ABB STOTZ-KONTAKT GmbH
P. O. Box 10 16 80
69006 Heidelberg, Germany
Phone: +49 (0) 6221 7 01-0
Fax: +49 (0) 6221 7 01-13 25
E-mail: info.desto@de.abb.com

You can find the address of your
local sales organisation on the
ABB home page
http://www.abb.com/contacts
-> Low Voltage Products and Systems

Document number 2CDC 112 167 D0201 (11.2011)

Note:
We reserve the right to make technical changes or modify the contents of this document without prior notice. With regard to purchase orders, the agreed particulars shall prevail. ABB AG does not accept any responsibility whatsoever for potential errors or possible lack of information in this document.

We reserve all rights in this document and in the subject matter and illustrations contained therein. Any reproduction, disclosure to third parties or utilization of its contents – in whole or in parts – is forbidden without prior written consent of ABB AG.

Copyright© 2011 ABB
All rights reserved