

**Main switchSurface mounting**

**Part no.** **P3-63/I4/SVB-SW**

**Article no.** **207344**

IP65

## Delivery programme

| | | | |
|---|---|---|---|
| Product range | | | Switch-disconnectors |
| Basic function | | | Main switches<br>Maintenance switches<br>Manual override switches |
| Part group reference | | | P3 |
| Design | | | Surface mounting |
| | | | 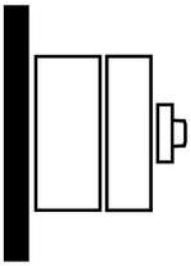 |
| Protection type | | | IP65 |
| | | |  |
| Emergency stop | | | without emergency switching off/emergency stop function |
| | | | With black rotary handle and locking ring |
| Locking facility | | | Lockable in the 0 (Off) position |
| | | | without auxiliary contacts |
| Contact sequence | | | 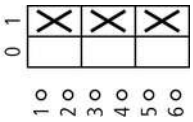 |
| Front plate no. | | | 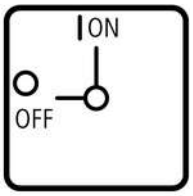<br>FS 908 |
| Main conducting paths | | | |
| No. of poles | | M | 3 |
| Auxiliary contacts | | | |
| | | N/O | 0 |
| | | B | 0 |
| Max. motor rating | | | |
| AC-23A | | | |
| 400/415 V<br>50-60 Hz | | | |
| 400 V | P | kW | 30 |
| Rated uninterrupted current | $I_u$ | A | 63 |

## Approvals

| | |
|---|---|
| Product Standards | UL 508; CSA-C22.2 No. 14-05; IEC/EN 60947-3; CE marking |
| UL File No. | E36332 |
| UL CCN | NLRV |

| | |
|---|---|
| CSA File No. | 12528 |
| CSA Class No. | 3211-05 |
| NA Certification | UL listed, CSA certified |
| Specially designed for NA | Yes, in combination with "+NA-I4" (105868) |
| Suitable for | Branch circuits, suitable as motor disconnect |
| Degree of Protection | IEC: IP65; UL/CSA Type 3R, 12 |

## General

| | | | |
|---|---|---|---|
| Standards | | | IEC/EN 60947, VDE 0660, IEC/EN 60204, CSA, UL switch disconnector according to IEC/EN 60947-3 |
| Lifespan, mechanical | Operations | x $10^6$ | 0.1 |
| Maximum operating frequency | | Operations/h | 30 |
| Climatic proofing | | | Damp heat, constant, to IEC 60068-2-78; Damp heat, cyclical, to IEC 60068-2-30 |
| Ambient temperature | | °C | |
| Open | | °C | - 25 - 50 |
| Enclosed | | °C | - 25 - 40 |
| Mounting position | | | As required |
| Mechanical shock resistance to IEC 60068-2-27 | Half-sinusoidal shock 20 ms | g | > 15 |

## Contacts

| | | | |
|---|---|---|---|
| Rated operational voltage | $U_e$ | V AC | 690 |
| Rated impulse withstand voltage | $U_{imp}$ | V AC | 6000 |
| Overvoltage category/pollution degree | | | III/3 |
| Rated uninterrupted current | $I_u$ | A | |
| open | $I_u$ | A | 63 |
| Enclosed | $I_u$ | A | 63 |
| Load rating with intermittent operation, class 12 | | | |
| AB 25 % DF | | x $I_e$ | 2 |
| AB 40 % DF | | x $I_e$ | 1.6 |
| AB 60 % DF | | x $I_e$ | 1.3 |
| Short-circuit rating | | | |
| Fuse | | A gG/gL | 80 |
| Rated short-time withstand current (1 s current) | $I_{cw}$ | $A_{rms}$ | 1260 |
| Switching angles | | ° | 90 |
| Current heat loss per contact at $I_e$ | | W | 4.5 |

## Terminal capacities

| | | | |
|---|---|---|---|
| Solid or stranded | | $mm^2$ | 1 x (2.5 - 35)<br>2 x (2.5 - 10) |
| Flexible with ferrules to DIN 46228 | | $mm^2$ | |
| Flexible with ferrule | | $mm^2$ | 1 x (1.5 - 25)<br>2 x (1.5 - 6) |
| Terminal screw | | | M5 |
| Tightening torque | | Nm | 3 |

## Switching capacity

| | | | |
|---|---|---|---|
| AC | | x $U_s$ | |
| Rated making capacity cos φ = 0.35 | | A | 800 |
| Rated breaking capacity, motor load switch cos φ = 0.35 | | A | |
| 230 V | | A | 640 |
| 400 V | | A | 600 |
| 500 V | | A | 590 |
| 690 V | | A | 340 |
| Rated operational current 440 V load-break switch AC-21A | $I_e$ | A | 63 |
| Rating, AC-3 motor load switch | P | kW | |
| 220 V 230 V | P | kW | 15 |

| | | | |
|---|---|---|---|
| 380 V 400 V | P | kW | 30 |
| 500 V | P | kW | 30 |
| 660 V 690 V | P | kW | 20 |
| AC-23A Motor load switches (main switches maintenance switches) | P | kW | |
| 230 V | P | kW | 18.5 |
| 400 V | P | kW | 30 |
| 500 V | P | kW | 37 |
| 690 V | P | kW | 50 |
| DC | | x $U_s$ | |
| DC-1, Load-break switches L/R = 1 ms | | | |
| Rated operational current | $I_e$ | A | 63 |
| Voltage per contact pair in series | | V | 60 |
| DC-23A, motor load switch L/R = 15 ms | | | |
| 24 V | | | |
| Rated operational current | $I_e$ | A | 50 |
| Contacts | | Quantity | 1 |
| 48 V | | | |
| Rated operational current | $I_e$ | A | 50 |
| Contacts | | Quantity | 2 |
| 60 V | | | |
| Rated operational current | $I_e$ | A | 50 |
| Contacts | | Quantity | 3 |
| 120 V | | | |
| Rated operational current | $I_e$ | A | 25 |
| Contacts | | Quantity | 3 |

## Notes

**Notes** Main switch characteristics to IEC/EN 60204; positive opening of contacts, operator element positively located on shaft
The rated uninterrupted current $I_u$ is stated at max. connected cross-section.
For terminal capacity solid, stranded and flexible:
Max. 2 cross-section sizes difference admissible when using 2 conductors.

## Technical data ETIM 4.0

| | | | |
|---|---|---|---|
| Number of auxiliary contacts as normally open contact | | | 0 |
| Number of auxiliary contacts as normally closed contact | | | 0 |
| Rated permanent current Iu | | A | 63 |
| Number of poles | | | 3 |
| Conditioned rated short-circuit current Iq | | kA | 0 |
| Degree of protection (IP), front side | | | IP65 |
| Number of auxiliary contacts as change-over contact | | | 0 |
| Interlockable | | | YES |
| Motor drive integrated | | | No |
| Connection type main current circuit | | | Screw connection |
| Version as emergency stop installation | | | No |
| Type of control element | | | - |
| Version as main switch | | | YES |
| Version as switch disconnector compact | | | YES |
| Version as safety switch | | | No |
| Version as maintenance-/service switch | | | YES |
| Rated operation power at AC-23, 400V | | kWh | 37 |
| Rated operation power AC-3, 400 V | | kWh | 30 |
| Suitable for ground mounting | | | YES |
| Suitable for front mounting | | | No |
| Suitable for front mounting center | | | No |
| Suitable for distribution board installation | | | No |
| Suitable for intermediate mounting | | | No |
| Max. rated operation voltage Ue AC | | V | 690 |

| | | | |
|---|---|---|---|
| Motor drive optional | | | No |
| Voltage release optional | | | No |
| Device construction | | | Complete device in housing |

## Characteristics

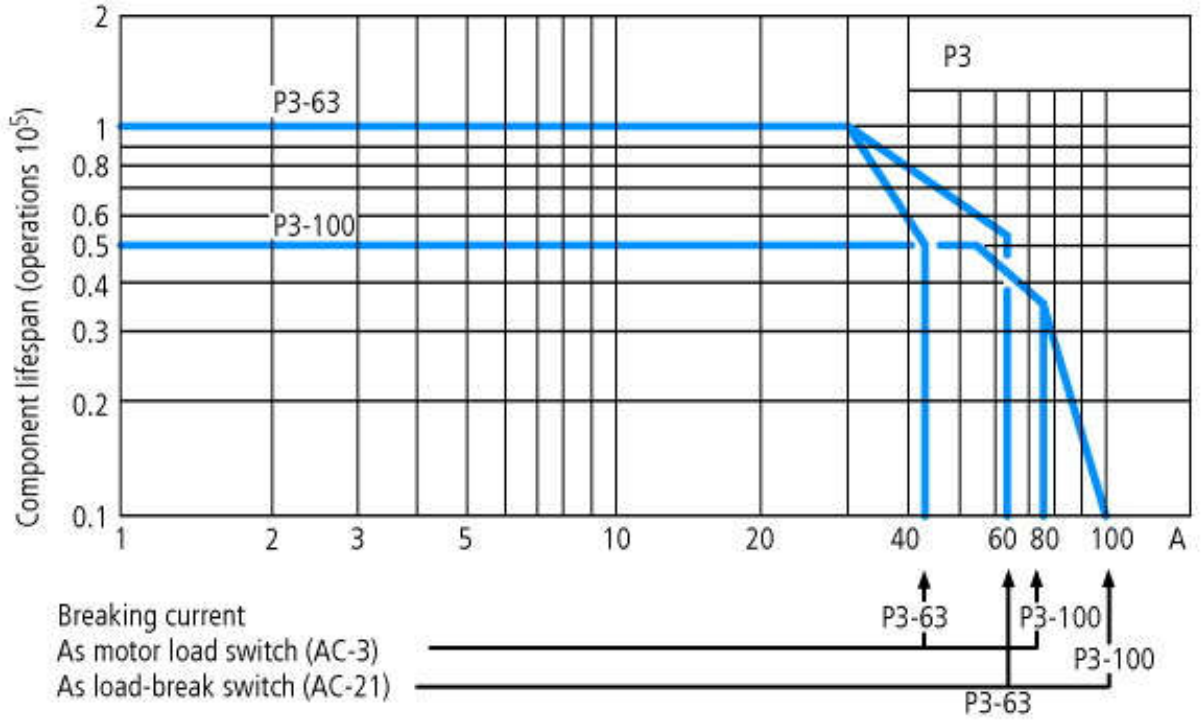


For utilisation category AC-4 (extreme load: 100 % inching, reversing or plugging)
The blocked rotor current of the motor should not exceed the rated current of the switch for AC-21A to ensure a reasonable device lifespan.

## Dimensions

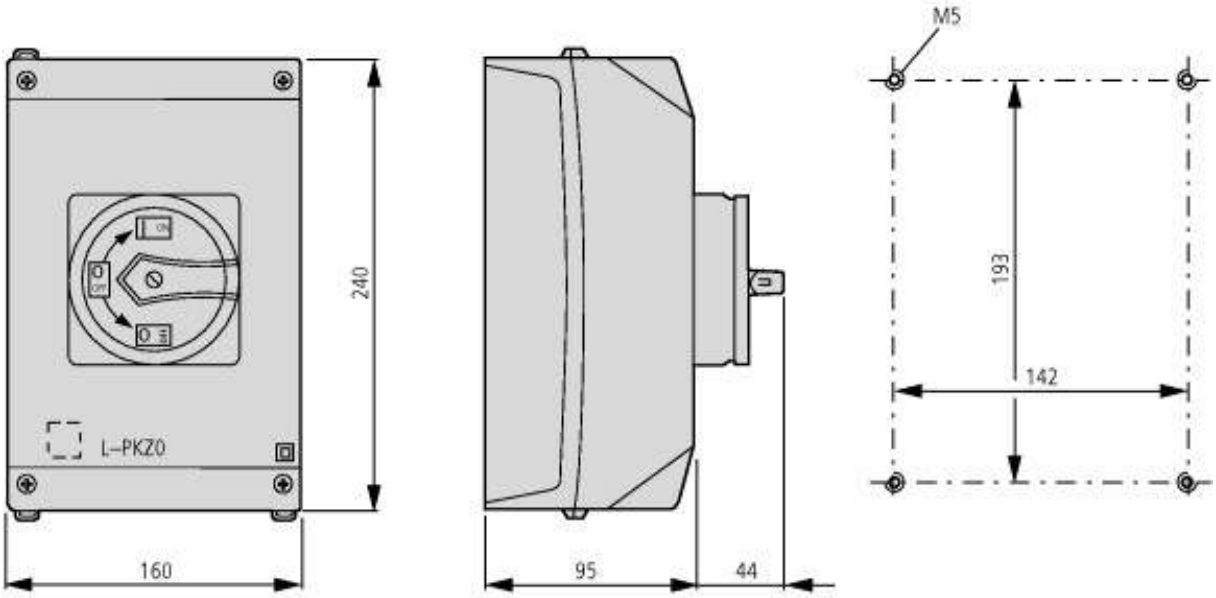


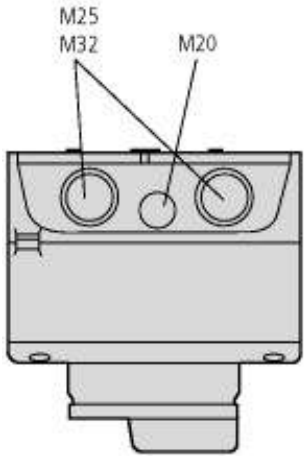


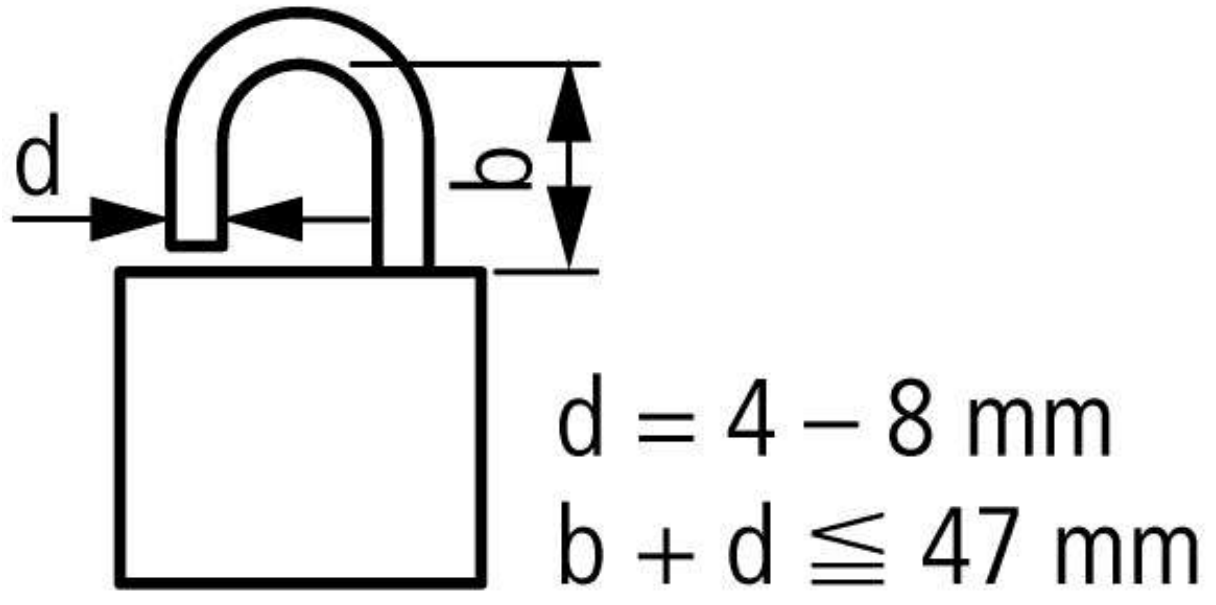


3 Padlocks

## Additional product information (links)

| **IL03801010Z (AWA1150-1982) Cam switch: switch-disconnector** | |
|---|---|
| IL03801010Z (AWA1150-1982) Cam switch: switch-disconnector | ftp://ftp.moeller.net/DOCUMENTATION/AWA_INSTRUCTIONS/IL03801010Z2011_06.pdf |
| http://ecat.moeller.net/flip-cat/?edition=HPLEN&startpage=4.87 | |


© 11/2012 by Eaton Industries GmbH