2201 E-2RS1TN9

Dimensions

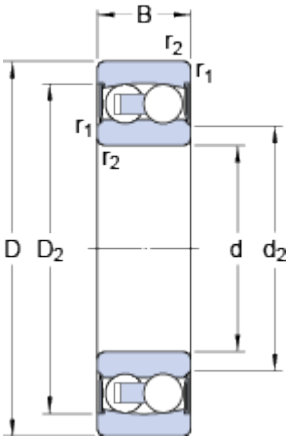

d		12	mm
D		32	mm
B		14	mm
d_2	≈	15.5	mm
D_2	≈	27.34	mm
$r_{1,2}$	min.	0.6	mm

Abutment dimensions

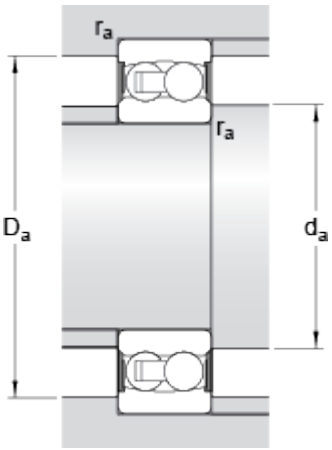

d_a	min.	15.5	mm
d_a	max.	15.5	mm
D_a	max.	27.8	mm
r_a	max.	0.6	mm

Calculation data

Basic dynamic load rating	C	6.2	kN
Basic static load rating	C_0	1.4	kN
Fatigue load limit	P_u	0.08	kN
Limiting speed		16000	r/min
Calculation factor	k_r	0.045	
Calculation factor	e	0.33	
Calculation factor	Y_0	2	
Calculation factor	Y_1	1.9	
Calculation factor	Y_2	3	

Mass

Mass bearing	0.053	kg