251657216

# Product Data Sheet

**8315100142**
VWC0120KUJBS
AF120-00142 24V P/2
6.500

ebmpapst
The engineer's choice



GREEN TECH

**AF120-00142 24V P/2 6.500**

**INDEX**

**1 General ..... 3**
**2 Mechanics ..... 3**
2.1 General ..... 3
2.2 Connections ..... 3
**3 Operating Data ..... 5**
3.1 Electrical Interface - Input ..... 5
3.2 Electrical Operating Data ..... 6
3.3 Electrical Interface - Output ..... 7
3.4 Electrical Features ..... 8
3.5 Aerodynamics ..... 9
3.6 Sound Data ..... 10
**4 Environment ..... 10**
4.1 General ..... 10
4.2 Climatic Requirements ..... 10
4.3 EMC ..... 10
**5 Safety ..... 12**
5.1 Electrical Safety ..... 12
5.2 Approval Tests ..... 12
**6 Reliability ..... 12**
6.1 General ..... 12

## 1 General

| | | |
|---|---|---|
| Fan type | Fan | |
| Rotating direction looking at rotor | Counterclockwise | |
| Airflow direction | Air outlet over struts | |
| Bearing system | Ball bearing | |
| Mounting position - shaft | Any | |

## 2 Mechanics

### 2.1 General

| | | |
|---|---|---|
| Width | 120 mm | |
| Height | 120 mm | |
| Depth | 38,0 mm | |
| Mass | 0,32 kg | |
| Housing material | Plastic | |
| Impeller material | Plastic | |
| Max. torque when mounted across both mounting flanges<br>Screw size | Wire outlet corner: 80 Ncm<br>Remaining corners: 80 Ncm<br>ISO 4762 - M4 degreased, without an additional brace and without washer | |

### 2.2 Connections

| | | |
|---|---|---|
| Electrical connection | Wires | |
| Lead wire length<br>Tolerance | L = 310 mm<br>+- 10,0 mm | |



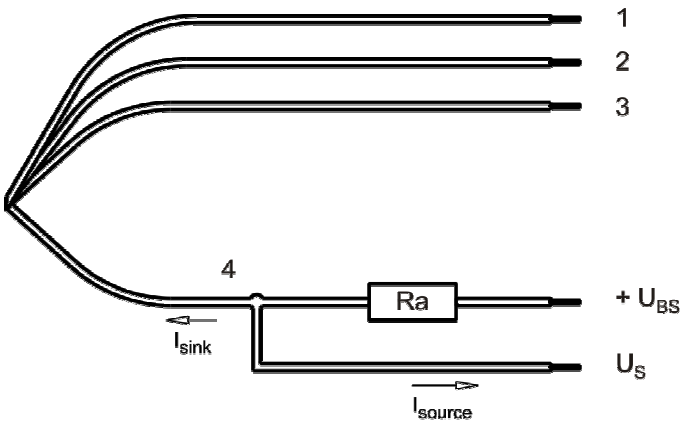


| Wire | Color | Operation | Wire size | Insulation diameter |
|---|---|---|---|---|
| 1 | blue | - GND | AWG 24 | 1,6 mm |
| 2 | red | + UB | AWG 24 | 1,6 mm |
| 3 | white | Tacho | AWG 24 | 1,6 mm |
| 4 | violet | PWM | AWG 24 | 1,6 mm |

The auxilliaries shown on the schematic diagram (which are required for the intended use) are not part of our delivery.

## 3 Operating Data

### 3.1 Electrical Interface - Input

| | |
|---|---|
| Control input | PWM |

**Features**

| | | |
|---|---|---|
| Inpute type | Open collector | |
| PWM - Frequency | | 1 kHz - 30 kHz<br>typical: 25 kHz |
| Max. voltage for logic "Low" | | 0,2 V |
| Maximum source current | short circuit current | <= 1 mA |
| Typical time until warm restart | After shutdown by PWM | ~ 9 s |

**Characteristics**

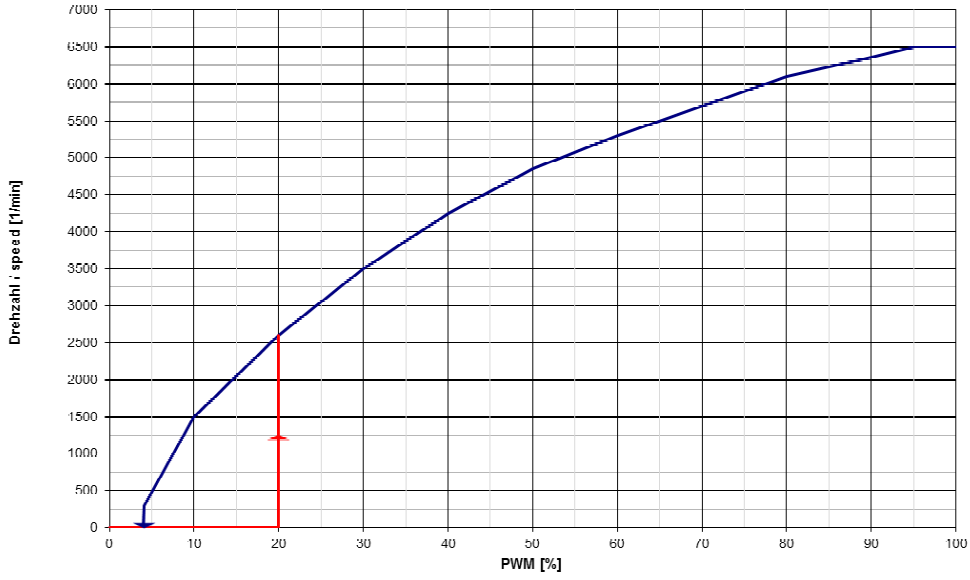


**Schematics**

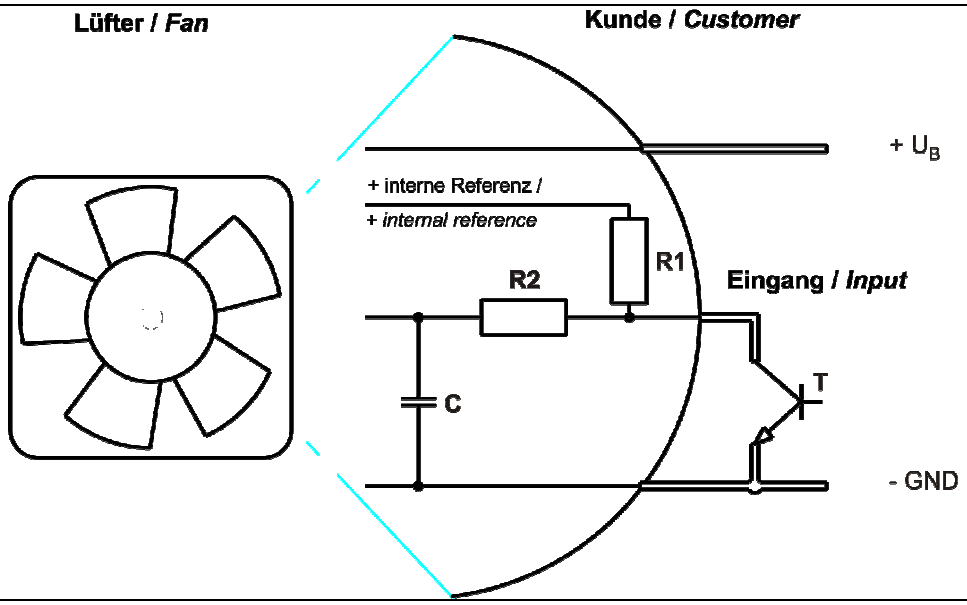


Because it is an open-loop control, the PWM characteristic can vary depending on the location.

### 3.2 Electrical Operating Data

Measurement conditions: Normal air density = 1,2 kg/m3; Temperature 23℃ +/ - 3℃; Motor axis horizontal; warm-up time before measuring 5 minutes (unless otherwise specified). In the intake and outlet area should not be any solid obstruction within 0,5 m.

Δp = 0: corresp. to free air flow (see chapter aerodynamics)
I: corresp. to arithm. mean current value

| **Name** | **Condition** | | |
|---|---|---|---|
| PWM 0001 | PWM: 100 %; f: 25 kHz | f: 1 kHz | f: 30 kHz |

| **Features** | **Condition** | **Symbol** | **Values** | | |
|---|---|---|---|---|---|
| Voltage range | | U | 16 V | | 28 V |
| Nominal voltage | | $U_N$ | | 24 V | |
| Power consumption<br>Tolerance | Δp = 0<br>PWM 0010 | P | 16 W<br>+- 20 % | 30 W<br>+- 17,5 % | 35 W<br>+- 17,5 % |
| Current consumption<br>Tolerance | Δp = 0<br>PWM 0010 | I | 1.000 mA<br>+- 17,5 % | 1.250 mA<br>+- 17,5 % | 1.250 mA<br>+- 17,5 % |
| Speed<br>Tolerance | Δp = 0<br>PWM 0010 | n | 5.050 1/min<br>+- 15 % | 6.500 1/min<br>+- 10 % | 6.700 1/min<br>+- 15 % |

### 3.3 Electrical Interface - Output

| | |
|---|---|
| Tacho type | /2 (open collector) |

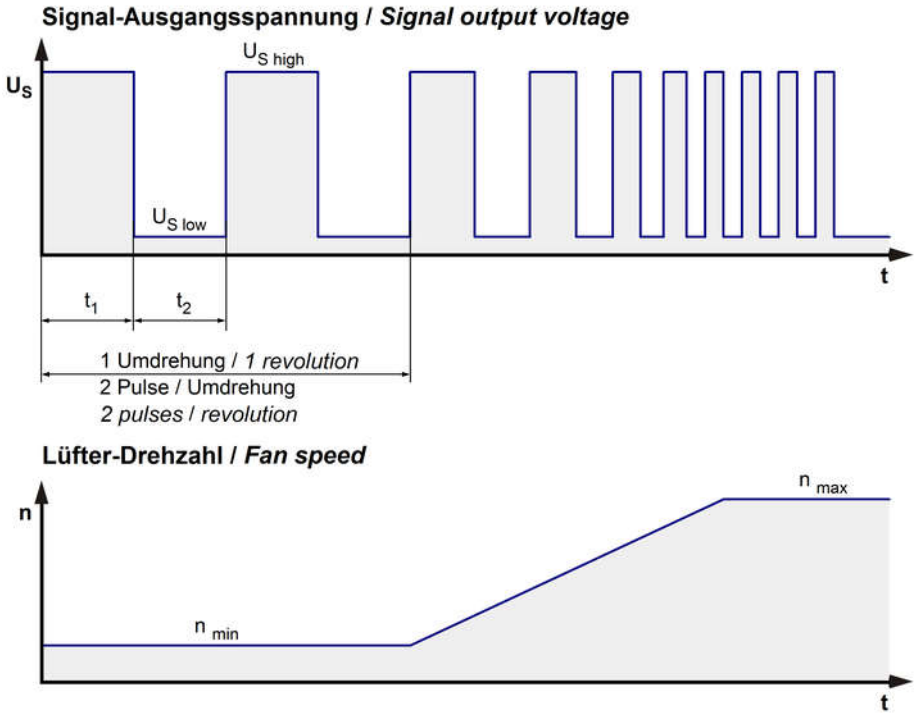


$$Ra = \frac{U_{BS} - U_{S\,low}}{I_{sink}}$$

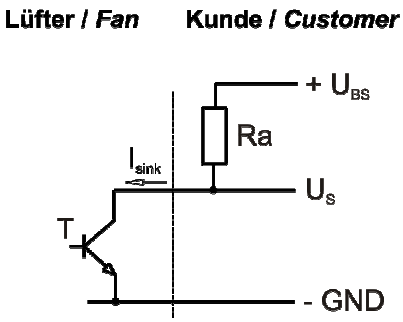


| Features | | Note | Values |
|---|---|---|---|
| Tacho operating voltage | $U_{BS}$ | | <= 60 V Max.: 60 V |
| Tacho signal Low | $U_{S\,low}$ | I sink: 2 mA | <= 0,4 V |
| Tacho signal High | $U_{S\,high}$ | I source: 0 mA | 60 V |
| Maximum sink current | $I_{sink}$ | | <= 4 mA |
| External resistor | | External resistor Ra from UBS to US required. All voltages measured to GND. | |
| Tacho frequency | | (2 x n) / 60 | |
| Tacho isolated from motor | | No | |
| Slew rate | | | => 0,5 V/us |

n = revolutions per minute (1/min)

### 3.4 Electrical Features

| | | |
|---|---|---|
| Electronic function | Contr. PCB | |
| Reversed polarity protection<br>Max. residual current at $U_N$ | Rectifying diode<br>$I_F$ <= 200 uA | |
| Locked rotor protection | Auto restart | |
| Locked rotor current at $U_N$ | $I_{block}$ approx. 800 mA | |
| Clock signal at locked rotor | $t_3$ / $t_4$ typical: 1 s / 9 s | |

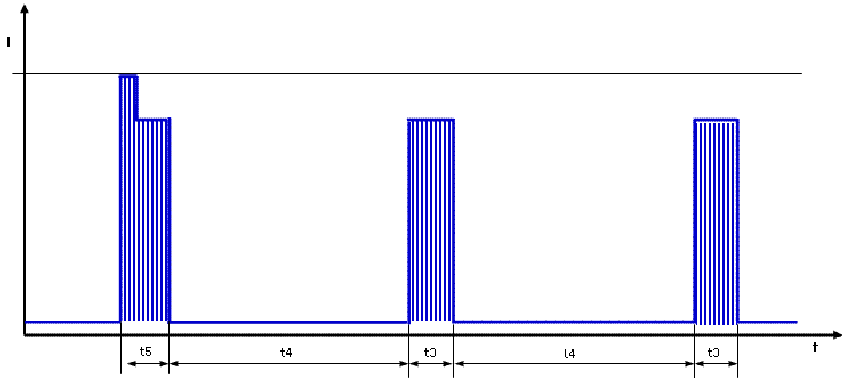


First pulse t5 typical 1,6s (1,3 .. 1,9s) followed by t4. Afterwards cyclical t3/t4.

### 3.5 Aerodynamics

| | |
|---|---|
| Measurement conditions: | Measured with a double chamber intake rig acc. to DIN EN ISO 5801.<br>Normal air density = 1,2 kg/m3; Temperature 23℃ +/ - 3℃;<br>In the intake and outlet area should not be any solid obstruction within 0,5 m. Motor shaft horizontal.<br>The information is only valid under the specified test conditions and may be changed by the installation conditions. If there are deviations from the standard test conditions, the characteristic values must be checked under the installed conditions. |

a.) Operation condition:

| | | | |
|---|---|---|---|
| 6.500 1/min at free air flow | PWM 100 %; f: 25 kHz | f: 1 kHz | f: 30 kHz |

| | | |
|---|---|---|
| Max. free-air flow (Δp = 0 / V̇ = max.) | 340 m3/h | |
| Max. static pressure (Δp = max. / V̇ =0) | 320 Pa | |

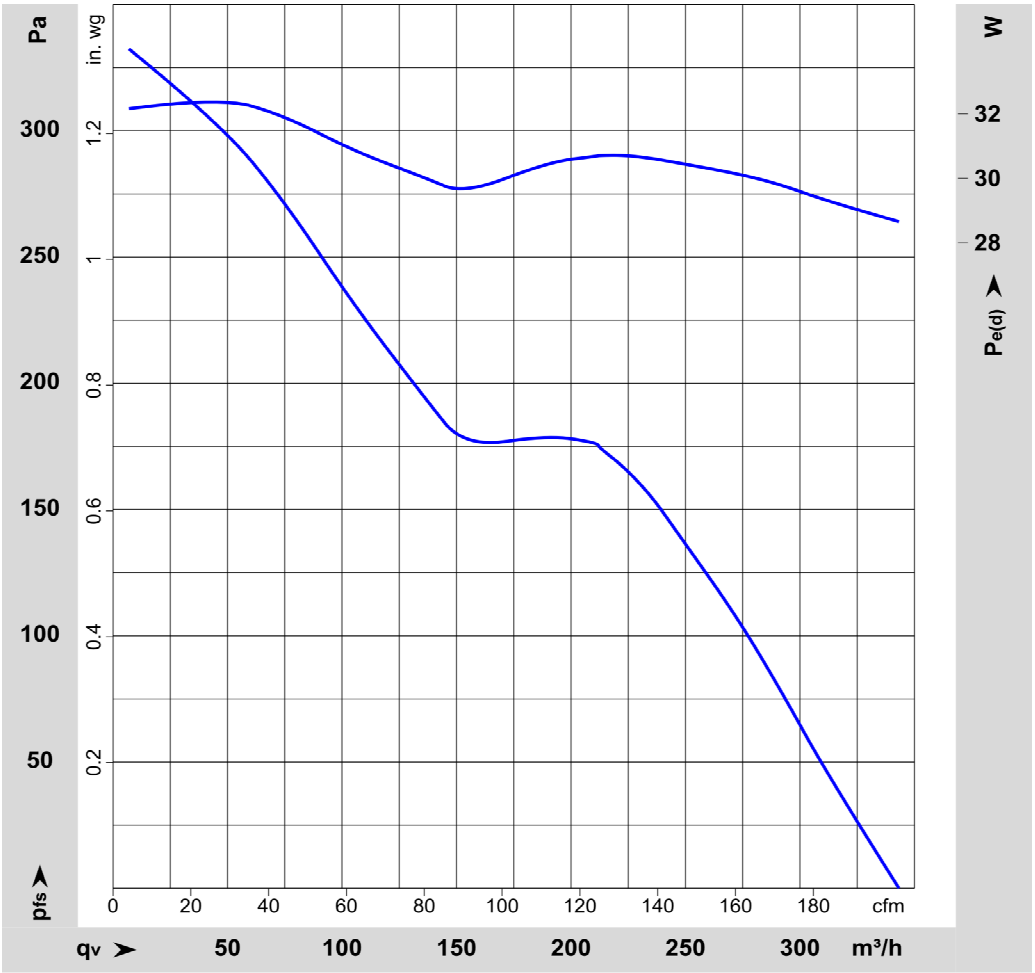

### 3.6 Sound Data

| | |
|---|---|
| Measurement conditions: | Sound pressure level: 1 meter distance between microphone and the air intake.<br>Sound power level: According to ISO 13347-3.<br>Measured in a semianchoic chamber with a background noise level of Lp(A) < 5 dB(A)<br>For further measurement conditions see chapter aerodynamics. |

a.) Operation condition:

| | | | |
|---|---|---|---|
| 6.500 1/min at free air flow | PWM 100 %; f: 25 kHz | f: 1 kHz | f: 30 kHz |

| | | |
|---|---|---|
| Optimal operating point | 290 m3/h @ 82 Pa | |
| Sound power level at the optimal operating point | 7 bel(A) | |
| Sound pressure level at free air flow, measured in rubber bands | 60 dB(A) | |

## 4 Environment

### 4.1 General

| | | |
|---|---|---|
| Min. permitted ambient temperature TU min. | -20 ℃ | |
| Max. permitted ambient temperature TU max. | 70 ℃ | |
| Min. permitted storage temperature TL min. | -40 ℃ | |
| Max. permitted storage temperature TL max. | 80 ℃ | |

### 4.2 Climatic Requirements

| | | |
|---|---|---|
| Humidity requirements | humid heat, constant; according to DIN EN 60068-2-78, 14 days | |
| Water exposure | None | |
| Dust requirements | None | |
| Salt fog requirements | None | |

Permitted application area:
The product is intended for use in sheltered rooms with controlled temperature and controlled humidity. Directly exposure to water must be avoided.

Pollution degree 1 (according DIN EN 60664-1)
There is either no pollution or it occurs only dry, non-conductive pollution. The pollution has no negative impact.

Please require severity levels and specification parameters from the responsible development departments.

### 4.3 EMC

| **Kind** | **Radiated Emission; 30 MHz - 1000 MHz** |
|---|---|
| According | DIN EN 55032:2016-02 |
| Ceck accuracy / Limit | Class B |
| Result | Below limit Class B |

| **Kind** | **Electrostatic Discharge Immunity Test** |
|---|---|
| According | DIN EN 61000-4-2:2001-12 |
| Ceck accuracy / Limit | Contact Discharge +/- 4 kV; Air Discharge +/- 8 kV |
| Result | A: The monitored function operates as designed during and after exposure to a disturbance. |

| **Kind** | **Electromagnetic Field Immunity Test** |
|---|---|
| According | DIN EN 61000-4-3:2006-12 |
| Ceck accuracy / Limit | 10 V/m; 80 - 1000 MHz; AM; m = 0,8; f = 1 kHz; 1%; t = 3 s |
| Result | A: The monitored function operates as designed during and after exposure to a disturbance. |

| **Kind** | **Electrical Fast Transient / Burst Immunity Test** |
|---|---|
| According | DIN EN 61000-4-4:2005-07 |
| Ceck accuracy / Limit | +/- 2 kV on Power Lines; Coupling: POS, NEG, {PE}, ALL, 5 kHz and 100 kHz; 1 min |
| Result | A: The monitored function operates as designed during and after exposure to a disturbance. |

| **Kind** | **Immunity to Conducted Disturbances, Induced by RF-Fields** |
|---|---|
| According | DIN EN 61000-4-6:2001-12 |
| Ceck accuracy / Limit | 10 Vrms; 150 kHz - 80 MHz; AM; m = 0,8; f = 1 kHz; 1%; t = 3 s |
| Result | A: The monitored function operates as designed during and after exposure to a disturbance. |

## 5 Safety

### 5.1 Electrical Safety

| | | |
|---|---|---|
| Dielectric strength<br>DIN EN 62368 and DIN EN 60335<br>A.) Type test<br>Measuring conditions: After 48h of storage at 95% R.H. and 25℃.<br>No arcing or breakdown is allowed!<br>All connections together to ground.<br>B.) Routine test<br>Measuring conditions: At indoor climate.<br>No arcing or breakdown is allowed!<br>All connections together to ground. | 500 VAC / 1 Min.<br><br>850 VDC / 1 Sec. | |
| Isolation resistance<br>Measuring conditions: After 48h of storage at 95% R.H. and 25℃ measured with U=500 VDC for 1 min. | RI > 10 MOhm | |
| Clearance / creepage distance | 1,0 mm / 1,2 mm | |
| Protection class | III | |

### 5.2 Approval Tests

| | | |
|---|---|---|
| CE | EC Declaration of Conformity | Yes |
| EAC | Eurasian Conformity | Yes |
| UL | Underwriters Laboratories | Yes / UL507, Electric Fans E38324 |
| VDE | Association for Electrical, Electronic and Information Technologies | Yes / Approval acc. to EN 62368 - Audio/video, information and communication technology equipment |
| CSA | Canadian Standards Association | Yes / CSA audited by UL according to C22.2 No. 113 Fans and Ventilators |
| CCC | China Compulsory Certification | Not applicable |

## 6 Reliability

### 6.1 General

| | | |
|---|---|---|
| Life expectancy L10 at TU = 40 ℃ | 45.000 h | |
| Life expectancy L10 at TU max. | 22.500 h | |
| Life expectancy L10 acc. to IPC 9591 at TU = 40 ℃ | 75.0 00 h | |

Copyright of this document, and giving it others and the use or communication of the contents thereof, are forbidden without express authority. Offenders are liable to the payment of damages. All rights are reserved in the event of the grant of a patent or the registration of a utility model or design.

Schutzvermerk nach DIN ISO 16016 beachten /
Refer to protection notice DIN ISO 16016 !

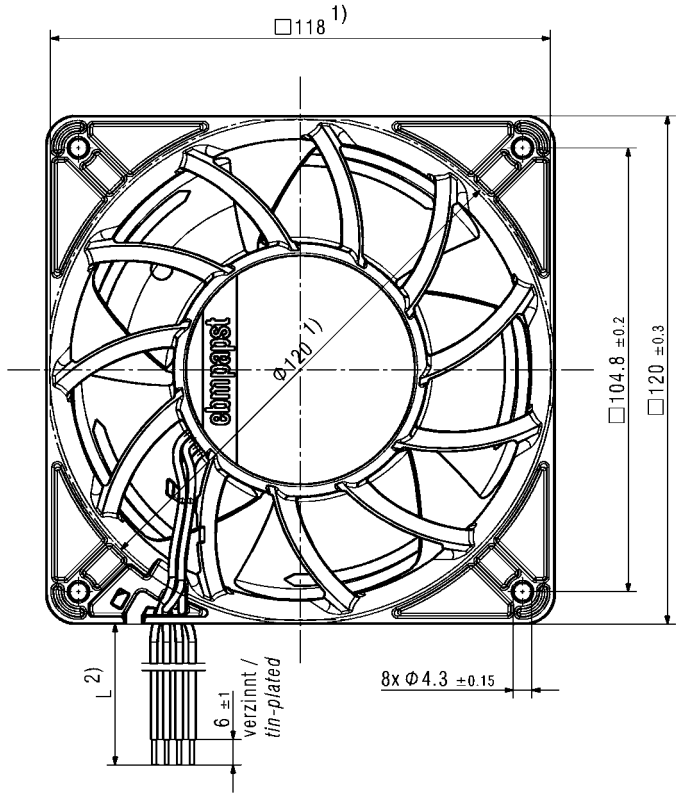


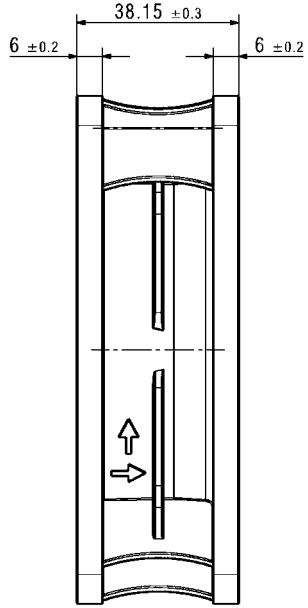


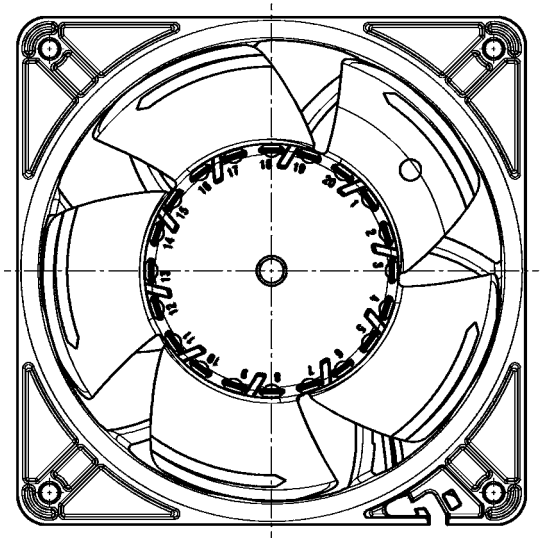

1) Maße für Montageausschnitt
*Dimensions for assembly wall*
2) Anzahl und Länge der Litzen siehe Datenblatt
*Length and number of wires see datasheet*

- Axialspiel der Kugellager mit Feder spielfrei verspannt
*Ball bearing without axial clearance by a pre-loaded spring*

| | | | | | |
|---|---|---|---|---|---|
| Dokument-Status / Document-State | CATIA-Version/ CATIA-Version | CAD-Umgebung/ CAD-Environment | Werkstoff / Material: | Volumen / Volume (mm^3): | |
| Aend.-Nr./ Change-No. | 8315100142 CPR000- | | | Gewicht / Mass (g): | |
| | 3D-Referenzmodell / 3D-Reference model | | Titel / Title: | | |
| Tolerierung / Tolerances: | Datum | Name | | | |
| Allgemeintoleranzen / Gen. Tolerances: | Bearb./ Drawn | | Zchg.-Nr./ Drawing No: | | Ers.f.Zchg. / Replaces: |
| | Gepr./ Checked | | | | |
| | Freig./ Release | | Dokumenttyp / Type of Document | Teildokument (Blatt/Page) | Index / Index: - |
| ebmpapst | | | | | Format / Size: |
| ebm-papst St.Georgen GmbH & Co KG | | | | | Massstab/Scale |