Top View of Assembly

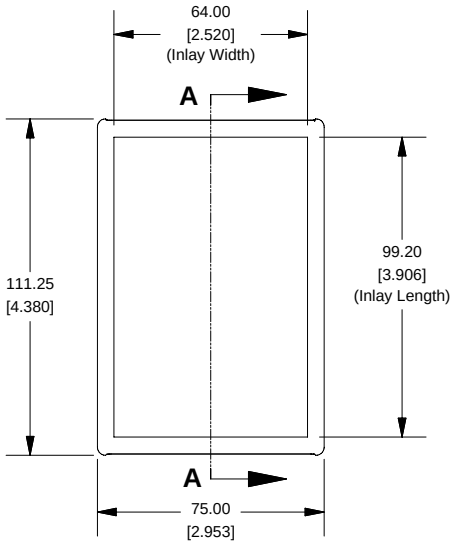

SECTION A-A
(Side View Inside Assembly)

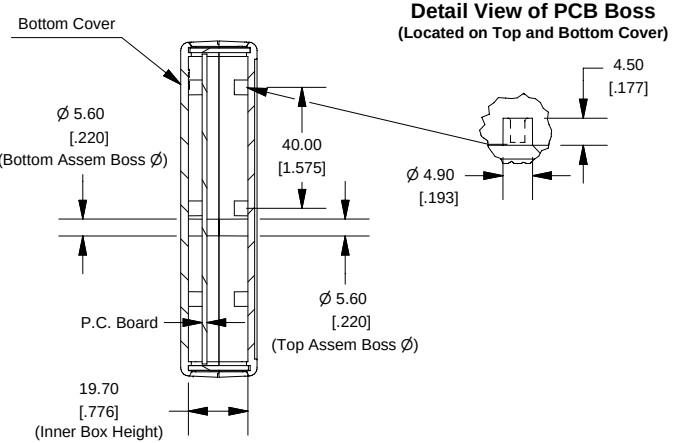

Detail View of PCB Boss
(Located on Top and Bottom Cover)

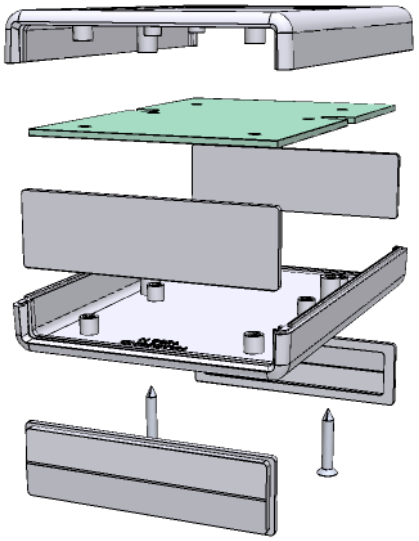

End View of Assembly

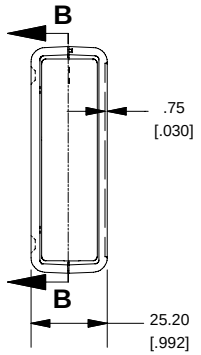

SECTION B-B
(Inside of Bottom Cover)

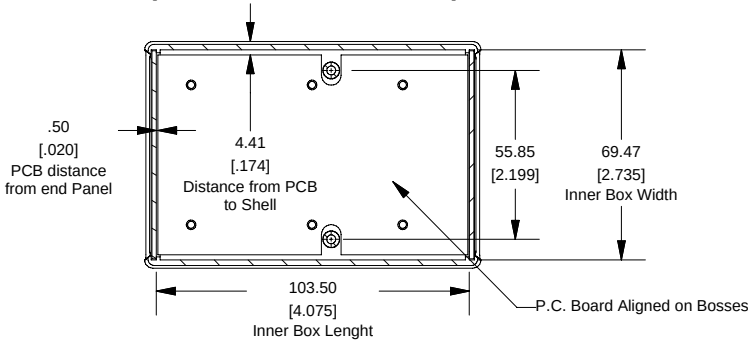

Front/Rear Panel
(Dashed Line Indicates Viewing Area)

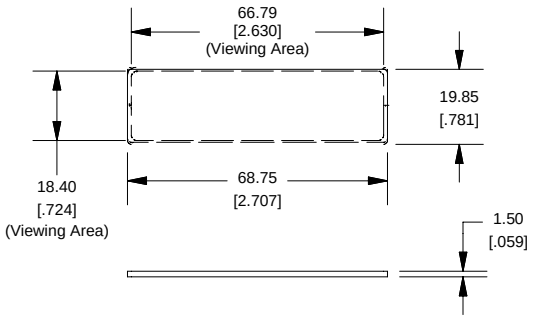

Maximum P.C. Board Size

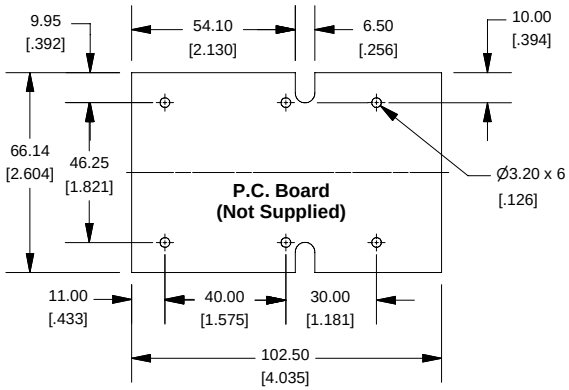

Enclosures can be Factory Modified (Milling, Drilling, Printing etc.)
Solid models of this enclosure available in STEP or IGES.
Contact Factory mjm@hammondmfg.com

NOTE
Designed specifically to house smart card readers.
Enclosure molded from GP ABS (UL94-HB) plastic.
Purchased assembly includes top and bottom cover, front and rear plastic panels (2 types - flat and contoured) and 2 cover screws.

PART NUMBERS	
1593N Enclosure	
Black Enclosure	1593NBK
Grey Enclosure	1593NGY
ACCESSORIES	
Cover Screws (Pkg 100) [#4 x 3/4" self-tapping oval head (19.1mm)]	1593QS100 (Silver) 1593QS100BK (Black)
P.C. Board Screws [#4 x 1/4" self-tapping (6.4mm)]	1593ATS50 (Pkg 50) 1593ATS100 (Pkg 100)
Belt or Pocket Clip	1599CLIP (Black) 1599CLIPGY (Grey)
Infared Panels (Pkg 10)	1593DIR10

HAMMOND MANUFACTURING™

1593N

www.hammondmfg.com