PN2160
PN-600-SER14-MFRKG/US/ /V

Pressure sensors

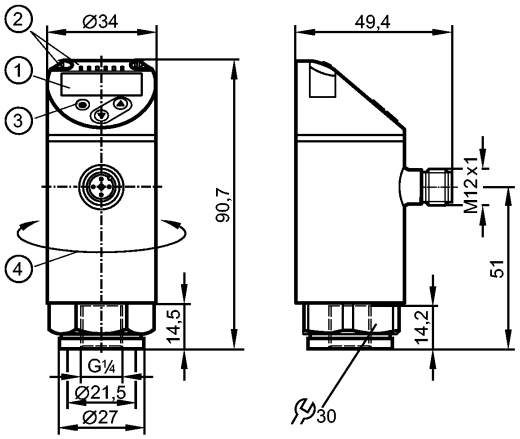

1: 4-digit alphanumeric display / alternating indication of red and green
2: LEDs (display unit / switching status)
3: Programming button
4: Upper part of the housing can be rotated by 345°

Product characteristics

Electronic pressure sensor
M12 connector
Function programmable
Measuring element: metal thin film cell
Process connection: G ¼ I
2 outputs OUT1 = switching output OUT2 = switching output or analogue output
4-digit alphanumeric display / alternating indication of red and green
Measuring range: 0...600 bar / 0...8700 psi / 0...60 MPa

Application

Application		Type of pressure: relative pressure Group 2 fluids according to the Pressure Equipment Directive (PED), group 1 fluids on request		
Pressure rating		800 bar	11580 psi	80 MPa
Bursting pressure min.		2500 bar	36250 psi	250 MPa
Vacuum resistance	[mbar]	-1000		
Medium temperature	[°C]	-25...80		

Electrical data

Electrical design		DC PNP/NPN
Operating voltage	[V]	18...30 DC [1])
Current consumption	[mA]	< 35
Insulation resistance	[MΩ]	> 100 (500 V DC)
Protection class		III
Reverse polarity protection		yes

Outputs

Output		2 outputs OUT1 = switching output OUT2 = switching output or analogue output
Output function		2 x normally open / closed programmable or 1 x normally open / closed programmable + 1 x analogue (4...20 mA / 0...10 V; scaleable 1:5)
Current rating	[mA]	250
Voltage drop	[V]	< 2
Short-circuit protection		pulsed

PN2160 - Electronic pressure sensor - eclass: 27201302 / 27-20-13-02

Overload protection		yes		
Switching frequency	[Hz]	≤ 500		
Analogue output		4...20 mA; 0...10 V		
Max. load	[Ω]	4...20 mA: max. 500		
Min. load resistance	[Ω]	0...10 V: min. 2000		
Measuring / setting range				
Measuring range		0...600 bar	0...8700 psi	0...60 MPa
Setting range				
Set point, SP		4...600 bar	60...8700 psi	0.4...60 MPa
Reset point, rP		1...597 bar	20...8660 psi	0.1...57.9 MPa
Analogue start point, ASP		0...480 bar	0...6960 psi	0...48 MPa
Analogue end point, AEP		120...600 bar	1740...8700 psi	12...60 MPa
in steps of		1 bar	20 psi	0.1 MPa
Accuracy / deviations				
Accuracy / deviations (in % of the span) Turn down 1:1				
Switch point accuracy		< ± 0.4		
Characteristics deviation *)		< ± 0.25 (BFSL) / < ± 0.5 (LS)		
Hysteresis		< ± 0.1		
Repeatability **)		< ± 0.1		
Long-term stability ***)		< ± 0.05		
Temperature coefficients (TEMPCO) in the temperature range -25...80° C (in % of the span per 10 K)				
Greatest TEMPCO of the zero point		0.2		
Greatest TEMPCO of the span		0.2		
Reaction times				
Power-on delay time	[s]	0.3		
Min. response time switching output	[ms]	< 1.5		
Delay time programmable dS, dr	[s]	0...50		
Damping for the switching output (dAP)	[s]	0...4		
Damping for the analogue output (dAA)	[s]	0...4		
Response time analogue output	[ms]	< 3		
Integrated watchdog		yes		
Software / programming				
Programming options		hysteresis / window function; NO / NC; on delay, off delay; damping; display unit; current/ voltage output		
Interfaces				
IO-Link device				
Transfer type		COM2		
IO-Link revision		1.1		
SDCI standard		IEC 61131-9		
IO-Link device ID		458 d / 00 01 ca h		
Profiles		Smart Sensor: Process Data Variable; Device Identification, Device Diagnosis		
SIO mode		yes		
Required master port class		A		
Process data analogue		1		
Process data binary		2		
Min. process cycle time	[ms]	2.3		
Environment				
Ambient temperature	[°C]	-25...80		
Storage temperature	[°C]	-40...100		
Protection		IP 65 / IP 67		
Tests / approvals				
Pressure equipment directive		97/23/EG: Sound engineering practice		
EMC		DIN EN 61000-6-2 DIN EN 61000-6-3		

PN2160 - Electronic pressure sensor - eclass: 27201302 / 27-20-13-02

Shock resistance		DIN EN 60068-2-27	50 g (11 ms)
Vibration resistance		DIN EN 60068-2-6	20 g (10...2000 Hz)
MTTF	[Years]	129	
UL approval number		J014	
Mechanical data			
Process connection		G ¼ I	
Materials (wetted parts)		1.4542 (17-4 PH / 630)[2]	
Housing materials		1.4542 (17-4 PH / 630)[2]; stainless steel (316L / 1.4404); PBT+PC-GF 30; PBT-GF 20; PC	
Min. pressure cycles		100 million	
Tightening torque	[Nm]	30...50 (recommended tightening torque[3])	
Restrictor element integrated		no (can be retrofitted)	
Weight	[kg]	0.235	
Displays / operating elements			
Display		Display unit: 3 x LED green (bar, psi, MPa) Switching status: 2 x LED yellow 4-digit alphanumeric display / alternating indication Measured values of red and green	
Electrical connection			
Connection		M12 connector; Gold-plated contacts	

Wiring

Core colours

BK black
BN brown
BU blue
WH white



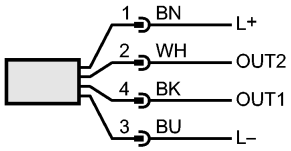

OUT1: switching output or IO-Link
OUT2: switching output or 4...20 mA / 0...10 V
Colours to DIN EN 60947-5-2

Remarks

Remarks

*) BFSL = Best Fit Straight Line / LS = Limit Value Setting
**) with temperature fluctuations < 10 K
***) in% of the span / 6 months
[1]) to EN50178, SELV, PELV
[2]) Characteristics similar to stainless steel (e.g. 304/1.4301) but higher strength.
[3]) Depends on lubrication, seal and pressure rating

Pack quantity	[piece]	1