PN3597
PN-001BREG14-MFRKG/US/ /V

Pressure sensors

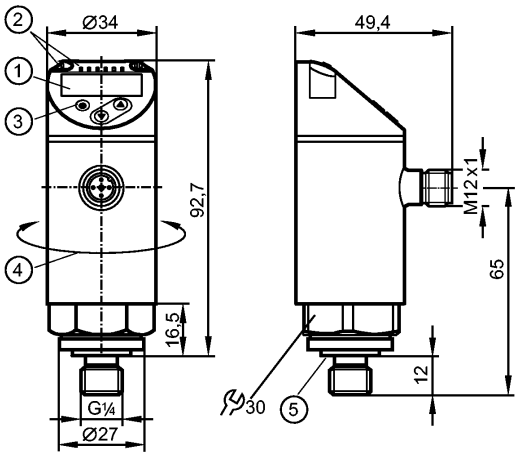

1: 4-digit alphanumeric display / alternating indication of red and green
2: LEDs (display unit / switching status)
3: Programming button
4: Upper part of the housing can be rotated by 345°
5: Process connection sealing FKM / DIN 3869

Product characteristics

Electronic pressure sensor
M12 connector
Function programmable
Measuring element: ceramic-capacitive pressure measuring cell
Process connection: G ¼ A / M5 I (according to DIN EN ISO 1179-2)
2 outputs OUT1 = switching output OUT2 = analogue output
4-digit alphanumeric display / alternating indication of red and green
Measuring range: 0...1000 mbar / 0...14.5 psi / 0...100 kPa / 0...29.5 inHg

Application

Application		Type of pressure: relative pressure Group 2 fluids according to the Pressure Equipment Directive (PED), group 1 fluids on request			
Pressure rating		10000 mbar	145 psi	1000 kPa	290 inHg
Bursting pressure min.		30000 mbar	450 psi	3000 kPa	880 inHg
Vacuum resistance	[mbar]	-1000			
Medium temperature	[°C]	-25...80			

Electrical data

Electrical design		DC PNP
Operating voltage	[V]	18...30 DC [1])
Current consumption	[mA]	< 35
Insulation resistance	[MΩ]	> 100 (500 V DC)
Protection class		III
Reverse polarity protection		yes

Outputs

Output		2 outputs OUT1 = switching output OUT2 = analogue output
Output function		normally open / closed programmable; 4...20 mA or 0...10 V
Current rating	[mA]	150; 200 (...60 °C); 250 (...40 °C)
Voltage drop	[V]	< 2.5
Short-circuit protection		pulsed

PN3597 - Electronic pressure sensor - eclass: 27201302 / 27-20-13-02

Overload protection		yes			
Switching frequency	[Hz]	≤ 170			
Analogue output		4...20 mA; 0...10 V			
Max. load	[Ω]	4...20 mA: max. 500			
Min. load resistance	[Ω]	0...10 V: min. 2000			
Measuring / setting range					
Measuring range		0...1000 mbar	0...14.5 psi	0...100 kPa	0...29.5 inHg
Setting range					
Set point, SP		10...1000 mbar	0.1...14.5 psi	1...100 kPa	0.2...29.5 inHg
Reset point, rP		5...995 mbar	0.05...14.5 psi	0.5...99.5 kPa	0.1...29.4 inHg
in steps of		5 mbar	0.05 psi	0.5 kPa	0.1 inHg
Accuracy / deviations					
Accuracy / deviations (in % of the span)					
Switch point accuracy		< ± 0.5			
Characteristics deviation *)		< ± 0.25 (BFSL) / < ± 0.5 (LS)			
Hysteresis		< ± 0.25			
Repeatability **)		< ± 0.1			
Long-term stability ***)		< ± 0.05			
Temperature coefficients (TEMPCO) in the temperature range -25...80° C (in % of the span per 10 K)					
Greatest TEMPCO of the zero point		0.2			
Greatest TEMPCO of the span		0.2			
Reaction times					
Power-on delay time	[s]	0.3			
Min. response time switching output	[ms]	< 3			
Delay time programmable dS, dr	[s]	0...50			
Damping for the switching output (dAP)	[s]	0...4			
Damping for the analogue output (dAA)	[s]	0...4			
Response time analogue output	[ms]	< 3			
Integrated watchdog		yes			
Software / programming					
Programming options		hysteresis / window function; NO / NC; on delay, off delay; damping; display unit; current/ voltage output			
Interfaces					
IO-Link device					
Transfer type		COM2			
IO-Link revision		1.1			
SDCI standard		IEC 61131-9			
IO-Link device ID		433 d / 00 01 b1 h			
Profiles		Smart Sensor: Process Data Variable; Device Identification, Device Diagnosis			
SIO mode		yes			
Required master port class		A			
Process data analogue		1			
Process data binary		1			
Min. process cycle time	[ms]	2.3			
Environment					
Ambient temperature	[°C]	-25...80			
Storage temperature	[°C]	-40...100			
Protection		IP 65 / IP 67			
Tests / approvals					
Pressure equipment directive		Sound engineering practice			
EMC		DIN EN 61000-6-2 DIN EN 61000-6-3			
Shock resistance		DIN EN 60068-2-27	50 g (11 ms)		
Vibration resistance		DIN EN 60068-2-6	20 g (10...2000 Hz)		

PN3597 - Electronic pressure sensor - eclass: 27201302 / 27-20-13-02

MTTF	[Years]	181
UL approval number		J004
Mechanical data		
Process connection		G ¼ A / M5 I (according to DIN EN ISO 1179-2)
Process connection sealing		FKM (to DIN 3869)
Materials (wetted parts)		stainless steel (316L / 1.4404); Al2O3 (ceramics); FKM
Housing materials		stainless steel (316L / 1.4404); PBT+PC-GF 30; PBT-GF 20; PC
Switching cycles min.		100 million
Tightening torque	[Nm]	25...35 (recommended tightening torque²)
Restrictor element integrated		no (can be retrofitted)
Weight	[kg]	2.578
Displays / operating elements		
Display		Display unit 4 x LED green (mbar, psi, kPa, inHg) Switching status 1 x LED yellow 4-digit alphanumeric display / alternating indication Measured values of red and green
Electrical connection		
Connection		M12 connector; Gold-plated contacts
Wiring		

Core colours

BK	black
BN	brown
BU	blue
WH	white



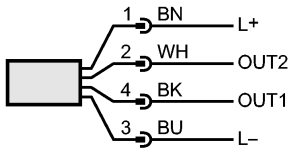

OUT1: switching output or IO-Link
OUT2: 4...20 mA / 0...10 V
Colours to DIN EN 60947-5-2

Remarks		
Remarks		*) BFSL = Best Fit Straight Line / LS = Limit Value Setting **) with temperature fluctuations < 10 K ***) in% of the span / 6 months ¹) to EN50178, SELV, PELV ²) Depends on lubrication, seal and pressure rating
Pack quantity	[piece]	1