
STAUFF

Overview In-Line Filters 128

SRFL-S / SRFL-D / SRFL-SW



In-Line Filters **SRFL-S / SRFL-D** 129 - 142
Max. 14 bar / 200 PSI
Max. 7000 l/min / 1850 US GPM

Technical Data / Dimensions 130 - 139

Order Code - In-Line Filter 140

Order Code - Filter Elements 140

Differential Pressure Switch with Visual Gauge Indicator 141

Flow Characteristics 142



In-Line Filters **SRFL-SW** 143 - 147
Max. 16 bar / 232 PSI
Max. 13330 l/min / 3521 US GPM

Technical Data / Dimensions 144 - 145

Order Code - In-Line Filter 146

Order Code - Filter Elements 146

Differential Pressure Switch with Visual Gauge Indicator 147

E

E

Description

STAUFF In-Line Simplex Filters SRFL-S and Duplex Filters SRFL-D are designed for in-line hydraulic applications. With its compact construction and the easy maintain assembly the SRFL-S and SRFL-D Filters are suitable for flow rates up to 7000 l/min / 1850 US GPM.

The two housings of the Duplex Filter SRFL-D are connected with a special gate valve that is operated with a level or hand wheel. Therefore the filter may be serviced without shutting down the hydraulic system.

The STAUFF In-Line Filter SRFL-SW is designed for installation in water circulations. This filter can be used for cleaning of e.g. industrial water of descaling systems. The filter elements are designed as basket strainers, which keep the dirt during the element change.

Media Compatibility

- Mineral oils, lubrication oils and water, others on request

Options and Accessories

Valves (except REL Filter Elements)

- Bypass valve (integrated in the filter element)

Clogging Indicators

- On request with visual and electrical differential pressure indicator
- The SRFL-SW is also available with an visual-electrical differntial pressure indicator



Type SRFL-S

- Version: Simplex
- Operating pressure: max. 14 bar / 200 PSI
- Nominal flow rate: max. 7000 l/min / 1850 US GPM
- Materials: Filter housing: Carbon Steel, Stainless Steel (on request)
- Connections: ANSI, DIN or SAE flange (ISO 6162-1/2)



Type SRFL-SW

- Version: Simplex, suitable for water Duplex on request
- Operating pressure: max. 16 bar / 232 PSI
- Nominal flow rate: max. 13330 l/min / 3521 US GPM
- Materials: Filter housing: Carbon Steel, Stainless Steel (on request)
- Connections: ANSI or DIN flange



Type SRFL-D

- Version: Duplex
- With switch control for maintenance of the system without stoppage
- Operating pressure: max. 14 bar / 200 PSI
- Nominal flow rate: max. 7000 l/min / 1850 US GPM
- Materials: Filter housing: Carbon Steel, Stainless Steel (on request)
- Connections: ANSI, DIN or SAE flange (ISO 6162-1/2)

In-Line Filters ▪ Type SRFL-S / D





Product Description

STAUFF In-Line Simplex Filters SRFL-S and Duplex Filters SRFL-D are designed for in-line hydraulic applications. With its compact construction and the easy maintain assembly the SRFL-S and SRFL-D Filters are suitable for flow rates up to 7000 l/min / 1850 US GPM. The two housings of the Duplex Filter SRFL-D are connected with a special gate valve that is operated with a level or hand wheel. Therefore the filter may be serviced without shutting down the hydraulic system. A high efficiency of contaminant removal is assured by using STAUFF RE series Replacement Filter Elements. The high dirt-hold capacity of STAUFF Elements ensure a long service life and, as a result, reduced maintenance costs.

Technical Data

Construction
- In-line assembly, base mounted

Materials
- Filter housing: Carbon Steel
  Stainless Steel (on request)
- Sealings: NBR (Buna-N®)
  FKM (Viton®)
  Other sealing materials on request

Port Connections
- DIN flange
- ANSI flange
- SAE flange

Operating Pressure
- Max. 14 bar / 200 PSI

Flow Rating
- Up to 7000 l/min / 1850 US GPM

Temperature Range
- -20 °C ... +100 °C / -44 °F ... +212 °F
  (Short term up to +110°C / +230 °F)

Filter Elements
- Specifications see page 140

Media Compatibility
- Mineral oils, lubrication oils, other fluids on request

Options and Accessories

Valve
- Bypass valve: Opening pressure 3 bar ± 0,3 bar / 43.5 PSI ± 4.35 PSI
  (integrated in the filter element) Other settings available on request

Clogging Indicators
- Differential pressure switch incl. visual indicator, setting 1,6 bar / 23 PSI
  Other clogging indicators available on request

Filter Size	Flow	Flange			Filter Element quantity		Arrangement of filter elements	Page
	l/min/ US GPM	DIN 2501	ANSI B 16.5	SAE 3000 PSI	SRFL-S	SRFL-D		
SRFL-S/D-160	900/240	DN 40	1-1/2	1-1/2	1x RE-160	2x RE-160	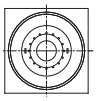	130 / 134
SRFL-S/D-200	900/240	DN 50	2	2	1x RE-200	2x RE-200		
SRFL-S/D-300	1400/370	DN 65	2-1/2	2-1/2	1x RE-300	2x RE-300		
SRFL-S/D-600	1400/370	DN 80	3	3	1x RE-600	2x RE-600		
SRFL-S/D-1200	4000/1050	DN 100	4	4	2x RE-600	4x RE-600		132 / 136
SRFL-S/D-1800	4000/1050	DN 125	5	5	3x RE-600	6x RE-600		
SRFL-S/D-2400	6000/1580	DN 150	6	6	4x RE-600	8x RE-600		
SRFL-S/D-3600	7000/1850	DN 200	8	8	6x RE-600	12x RE-600		132 / 138

In-Line Filters ▪ Type SRFL-S-160 / 200 / 300 / 600

Detail arrangement of filter elements

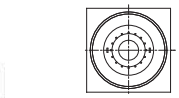

SRFL-S-160 / 200 / 300 / 600

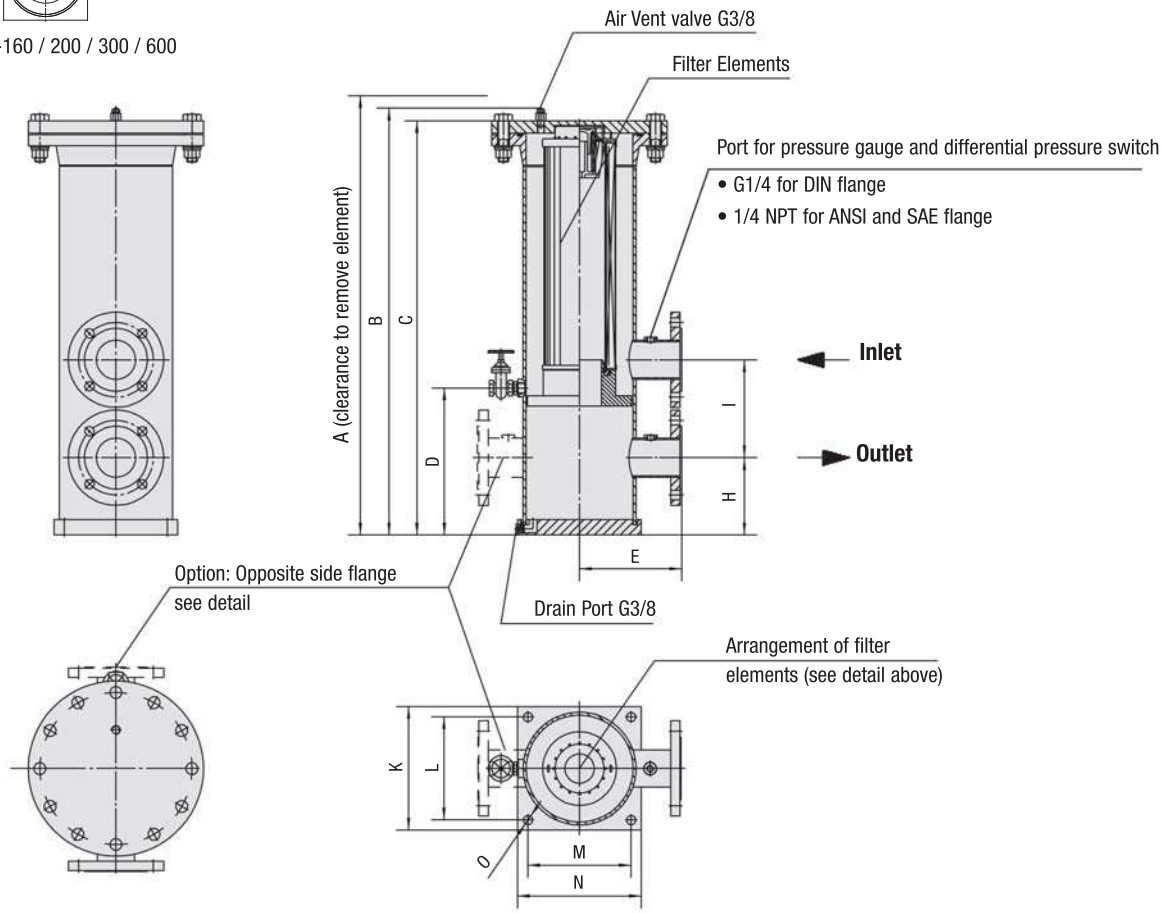

Option: Connection location

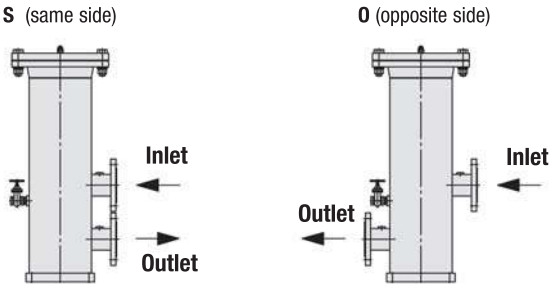

In-Line Filters ▪ Type SRFL-S-160 / 200 / 300 / 600

Flange Connection	Filter Size SRFL-S			
	160	200	300	600
DIN	DN 40	DN 50	DN 65	DN 80
ANSI	1-1/2	2	2-1/2	3
SAE	1-1/2	2	2-1/2	3

Dimensions (mm/in)		Filter Size SRFL-S			
		160	200	300	600
A		885,8	1045,8	1248,7	2126,7
		34.87	41.17	49.16	83.73
B		607,6	688,7	828,6	1267,6
		23.92	27.12	32.63	49.91
C		584	664	803,9	1242,9
		22.99	26.14	31.65	48.93
D		214	214	285	285
		8.43	8.43	11.22	11.22
E		148	148	198	198
		5.83	5.83	7.80	7.80
H		130	140	150	160
		5.12	5.51	5.91	6.30
I		155	190	190	220
		6.10	7.48	7.48	8.66
K		150	150	240	240
		5.91	5.91	9.45	9.45
L		125	125	200	200
		4.92	4.92	7.87	7.87
M		125	125	200	200
		4.92	4.92	7.87	7.87
N		150	150	240	240
		5.91	5.91	9.45	9.45
O		11	11	18	18
		.43	.43	.71	.71
Total Oil Capacity (l/gal)		6,0	7,1	22,2	37,1
		1.59	1.86	5.87	9.80
Weight (kg/lbs)		14,5	15,9	29	34,5
		32	35	64	76
Filter Elements	Designation	RE-160 ...	RE-200 ...	RE-300 ...	RE-600 ...
	Quantity	1 x 1	1 x 1	1 x 1	1 x 1

In-Line Filters ▪ Type SRFL-S-1200 / 1800 / 2400 / 3600

E

Detail arrangement of filter elements

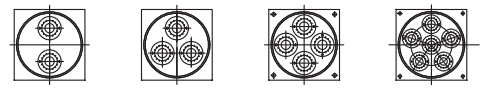

SRFL-S-1200 SRFL-S-1800 SRFL-S-2400 SRFL-S-3600

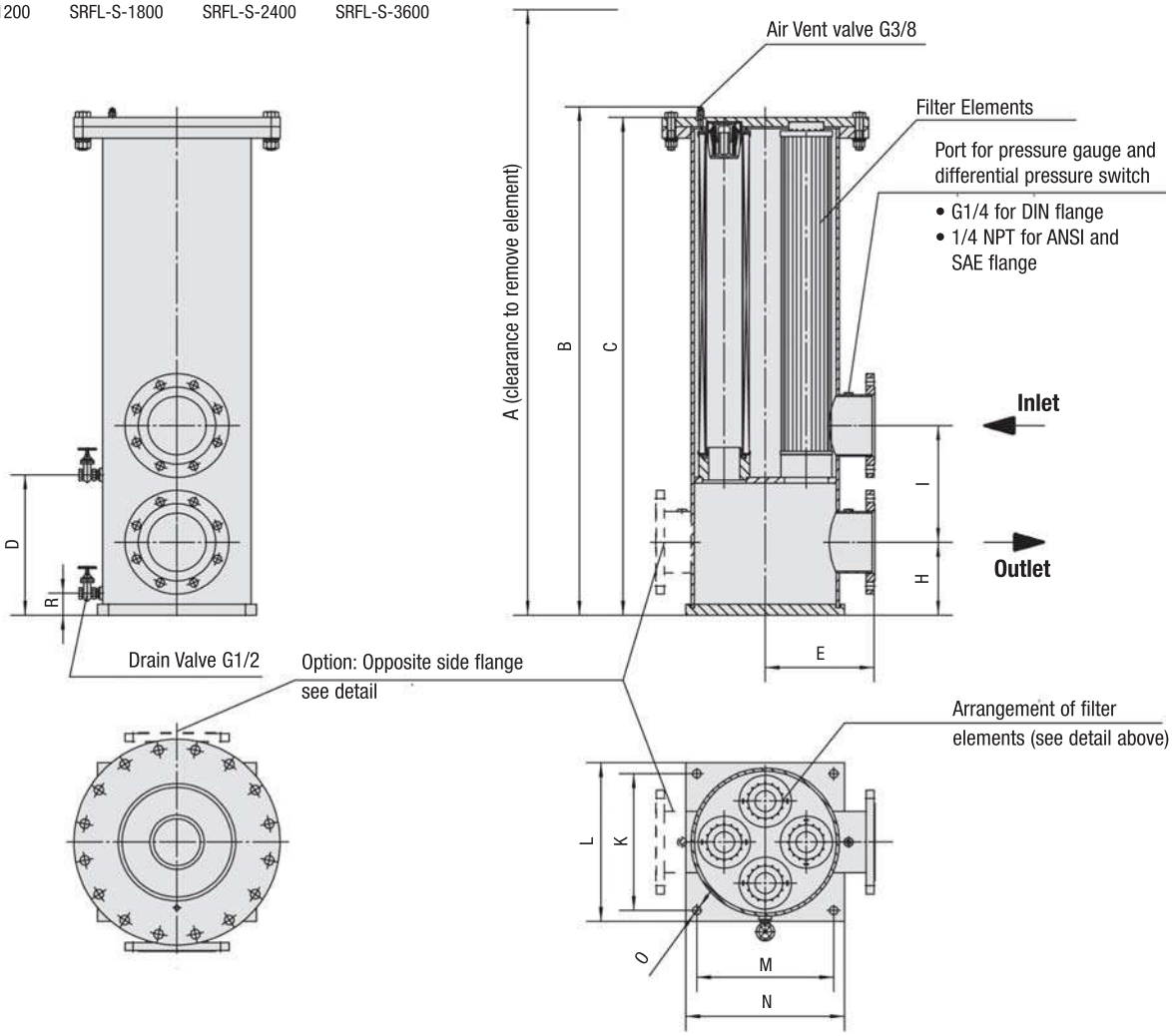

Option: Connection location

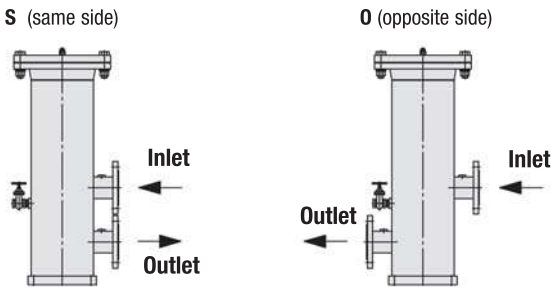

In-Line Filters ▪ Type SRFL-S-1200 / 1800 / 2400 / 3600

Flange Connection	Filter Size SRFL-S			
	1200	1800	2400	3600
DIN	DN 100	DN 125	DN 150	DN 200
ANSI	4	5	6	8
SAE	4	5	6	8

Dimensions (mm/in)		Filter Size SRFL-S			
		1200	1800	2400	3600
A		2176,7	2176,7	2249,1	2249,1
		85.70	85.70	88.55	88.55
B		1319,6	1323,6	1394,8	1392,8
		51.96	52.11	54.92	54.84
C		1294,6	1294,9	1366,1	1368,1
		50.98	50.98	53.78	53.86
D		275	275	325	325
		10.83	10.83	12.80	12.80
E		273	273	298	398
		10.75	10.75	11.73	15.67
H		190	190	200	252
		7.48	7.48	7.87	9.92
I		250	280	320	425
		9.84	11.02	12.6	16.73
K		385	385	435	540
		15.16	15.16	17.13	21.26
L		325	325	375	480
		12.80	12.80	14.76	18.90
M		325	325	375	480
		12.80	12.80	14.76	18.90
N		385	385	435	540
		15.16	15.16	17.13	21.26
O		23	23	23	23
		.91	.91	.91	.91
R		60	60	60	60
		2.36	2.36	2.36	2.36
Total Oil Capacity (l/gal)		103	103	149	232
		27.21	27.21	39.37	61.30
Weight (kg/lbs)		86,2	90,7	105,2	154,2
		190	200	232	340
Filter Elements	Designation	RE-600 ...	RE-600 ...	RE-600 ...	RE-600 ...
	Quantity	1 x 2	1 x 3	1 x 4	1 x 6

In-Line Filters ▪ Type SRFL-D-160 / 200 / 300 / 600

Detail arrangement of filter elements



SRFL-D-160 / 200 / 300 / 600

Detail connecting ports

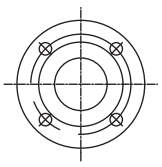

Flange 1-1/2, 2, 2-1/2

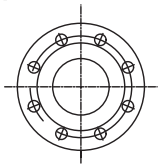

Flange 3

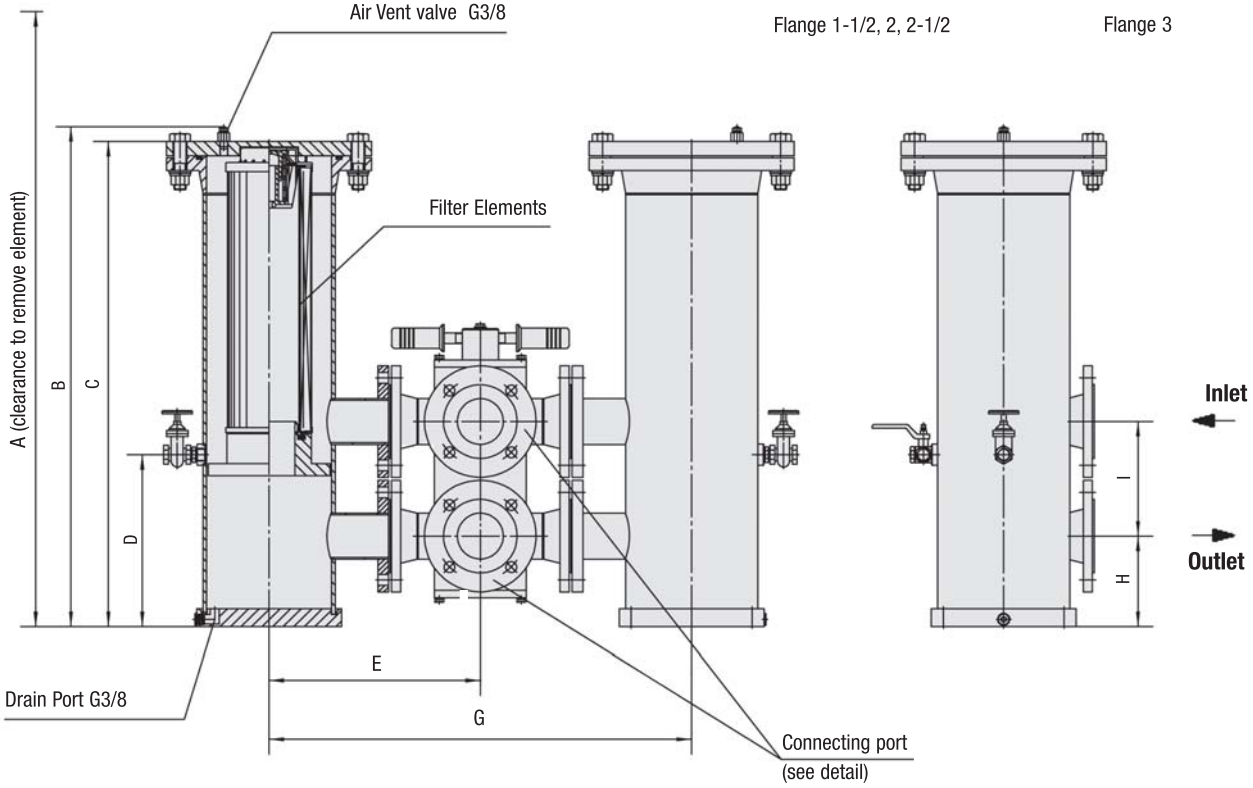

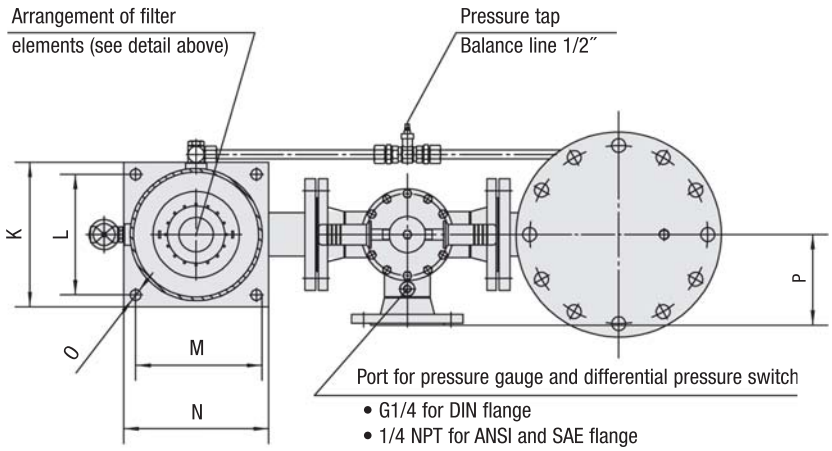

In-Line Filters ▪ Type SRFL-D-160 / 200 / 300 / 600

Flange Connection	Filter Size SRFL-D			
	160	200	300	600
DIN	DN 40	DN 50	DN 65	DN 80
ANSI	1-1/2	2	2-1/2	3

Dimensions (mm/in)		Filter Size SRFL-D			
		160	200	300	600
A		885,8	1045,8	1248,7	2126,7
		34.87	41.17	49.16	83.73
B		607,6	688,7	828,6	1267,6
		23.92	27.12	32.63	49.91
C		584	642	803,9	1242,9
		22.99	25.28	31.65	48.93
D		214	214	285	285
		8.43	8.43	11.22	11.22
E		260	300	350	375
		10.24	11.81	13.78	14.76
G		520	600	700	750
		20.47	23.62	27.56	29.53
H		130	140	150	160
		5.12	5.51	5.91	6.30
I		155	190	190	220
		6.10	7.48	7.48	8.66
K		150	150	240	240
		5.91	5.91	9.45	9.45
L		125	125	200	200
		4.92	4.92	7.87	7.87
M		125	125	200	200
		4.92	4.92	7.87	7.87
N		150	150	240	240
		5.91	5.91	9.45	9.45
O		11	11	18	18
		.43	.43	.71	.71
P		110	150	150	175
		4.33	5.91	5.91	6.89
Total Oil Capacity (l/gal)		6	7,1	22,2	37,1
		1.59	1.86	5.87	9.80
Weight (kg/lbs)		43	56,7	84	104
		95	125	185	230
Filter Elements	Designation	RE-160 ...	RE-200 ...	RE-300 ...	RE-600 ...
	Quantity	2 x 1	2 x 1	2 x 1	2 x 1

E

In-Line Filters ▪ Type SRFL-D-1200 / 1800 / 2400

Detail arrangement of filter elements



SRFL-D-1200 SRFL-D-1800 SRFL-D-2400

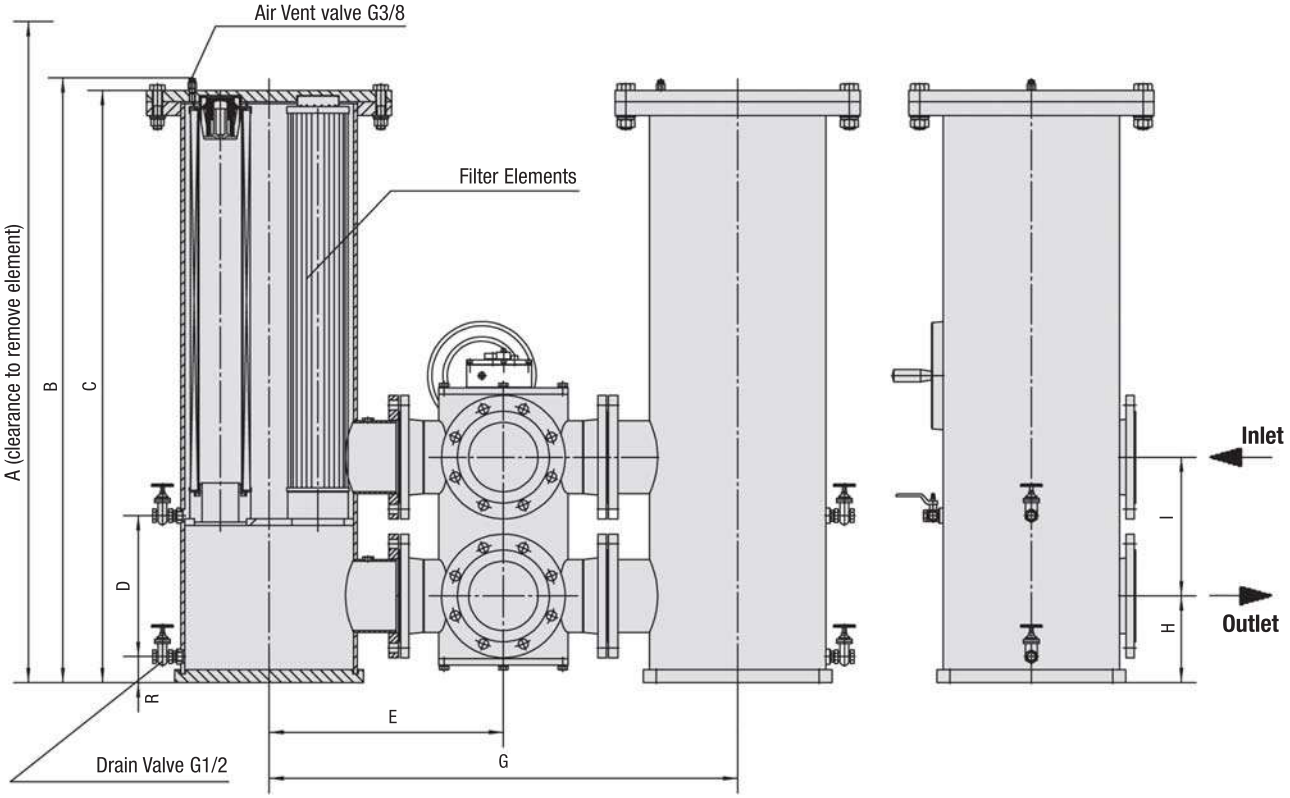

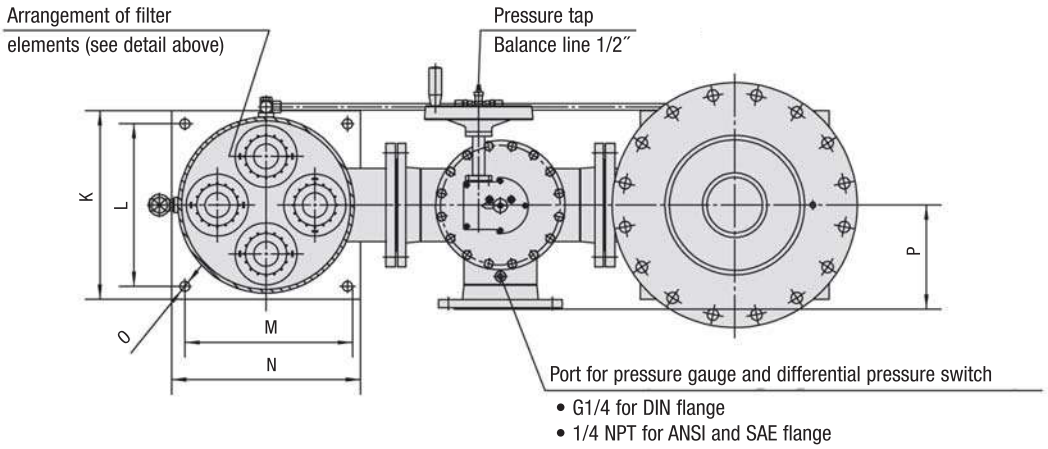

In-Line Filters ▪ Type SRFL-D-1200 / 1800 / 2400

Flange Connection	Filter Size SRFL-D		
	1200	1800	2400
DIN	DN 100	DN 125	DN 150
ANSI	4	5	6

Dimensions (mm/in)		Filter Size SRFL-D		
		1200	1800	2400
A		2176,7	2176,7	2249,1
		85.70	85.70	88.55
B		1319,6	1323,6	1394,8
		51.96	52.11	54.92
C		1294,9	1294,9	1366,1
		50.98	50.98	53.78
D		275	275	325
		10.83	10.83	12.80
E		475	500	540
		18.70	19.69	21.26
G		950	1000	1080
		37.40	39.37	42.52
H		190	190	200
		7.48	7.48	7.87
I		250	280	320
		9.84	11.02	12.60
K		385	385	435
		15.16	15.16	17.13
L		325	325	375
		12.80	12.80	14.76
M		325	325	375
		12.80	12.80	14.76
N		385	385	435
		15.16	15.16	17.13
O		23	23	23
		.91	.91	.91
P		200	225	240
		7.87	8.86	9.45
R		60	60	60
		2.36	2.36	2.36
Total Oil Capacity (l/gal)		103	103	149
		27.20	27.20	39.30
Weight (kg/lbs)		215	233	263
		475	515	580
Filter Elements	Designation	RE-600 ...	RE-600 ...	RE-600 ...
	Quantity	2 x 2	2 x 3	2 x 4

In-Line Filters ▪ Type SRFL-D-3600

Detail arrangement of filter elements



SRFL-D-3600

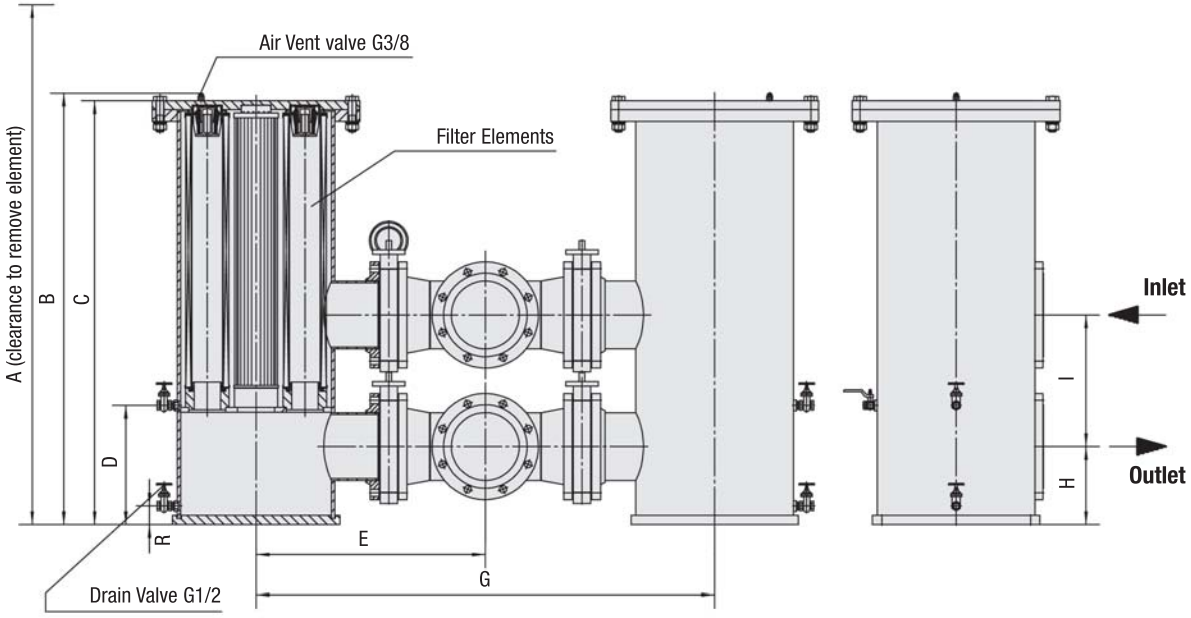

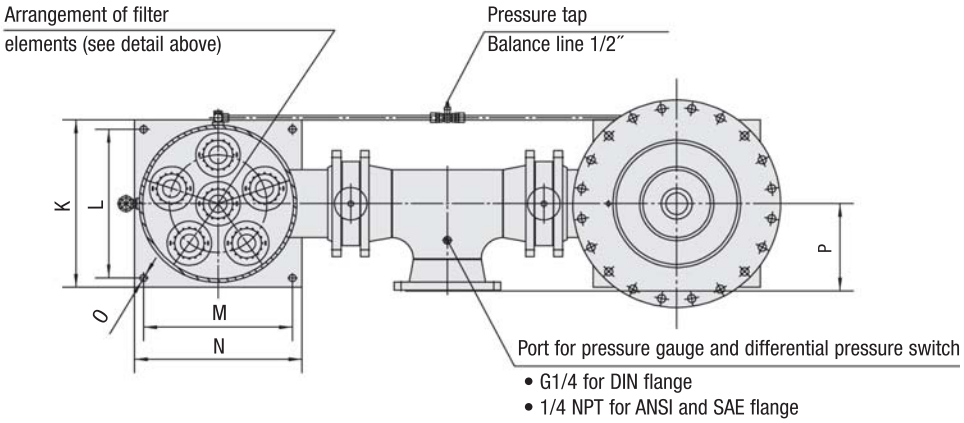

In-Line Filters ▪ Type SRFL-D-3600

Flange Connection	Filter Size SRFL-D
	3600
DIN	DN 200
ANSI	8

Dimensions (mm/in)		Filter Size SRFL-D
		3600
A		2249,1
		88.55
B		1392,8
		54.84
C		1368,1
		53.86
D		325
		12.80
E		739
		29.11
G		1479
		58.22
H		252
		9.92
I		425
		16.73
K		540
		21.26
L		480
		18.90
M		480
		18.90
N		540
		21.26
O		23
		.91
P		281,4
		11.08
R		60
		2.36
Total Oil Capacity (l/gal)		233
		61.3
Weight (kg/lbs)		390
		860
Filter Elements	Designation	RE-600 ...
	Quantity	2 x 6

In-Line Filter Housings / Complete Filters ▪ Type SRFL-S / D

SRFL-D - 160 - G - 10 - B - A - 0 - W132 - V / X

① ② ③ ④ ⑤ ⑥ ⑦ ⑧ ⑨ ⑩

① Type

In-Line Simplex Housing	SRFL-S
In-Line Duplex Housing	SRFL-D

② Group

Flow	Size
900 l/min / 240 US GPM	160
900 l/min / 240 US GPM	200
1400 l/min / 370 US GPM	300
1400 l/min / 370 US GPM	600
4000 l/min / 1050 US GPM	1200
4000 l/min / 1050 US GPM	1800
6000 l/min / 1580 US GPM	2400
7000 l/min / 1850 US GPM	3600

③ Filter Material

Material	Max. Δp*collapse	Micron ratings available	Code
Without filter element	-	-	0
Inorg. glass fibre	25 bar / 363 PSI	3, 5, 10, 20	G
Stainless fibre	30 bar / 435 PSI		A
Filter paper	10 bar / 145 PSI	10, 20	N
Stainless mesh	30 bar / 435 PSI	25, 50, 100, 200	S

* Note: Collapse/burst resistance as per ISO 2941. Other materials on request.

④ Micron Rating

3 µm	03
5 µm	05
10 µm	10
20 µm	20
25 µm	25
50 µm	50
100 µm	100
200 µm	200

Note: Other micron ratings on request.

⑤ Sealing Material

NBR (Buna®)	B
FKM (Viton®)	V

Note: Other sealing materials on request.

⑥ Connection Style

Connection Style	Group								Code
	160	200	300	600	1200	1800	2400	3600	
DIN Flange	DN 40	DN 50	DN 65	DN 80	DN 100	DN 125	DN 150	DN 200	D
ANSI Flange	1-1/2	2	2-1/2	3	4	5	6	8	A
SAE Flange	1-1/2	2	2-1/2	3	4	5	-	-	S

⑦ Connection Location

Opposite side*	0
Same side	S

* Note: Not for SRFL-D series

⑧ Housing Material

Carbon Steel	W132
Stainless Steel	W4

⑨ Clogging Indicator

Without Clogging Indicator	0
Differential Pressure Switch with Visual Gauge Indicator	V

Note: Other indicators on request.

⑩ Design Code

Only for information	X

Filter Elements ▪ Type RE

RE - 160 - G - 10 - B / X

① ② ③ ④ ⑤ ⑥

① Type

Filter Element Series	RE

② Group

Designation	Filter Element Quantity		Size
	SRFL-S	SRFL-D	
RE-160	1x1	2x1	160
RE-200	1x1	2x1	200
RE-300	1x1	2x1	300
RE-600	1x1	2x1	600
RE-600	1x2	2x2	1200
RE-600	1x3	2x3	1800
RE-600	1x4	2x4	2400
RE-600	1x6	2x6	3600

③ Filter Material

Material	Max. Δp*collapse	Micron ratings available	Code
Inorg. glass fibre	25 bar / 363 PSI	3, 5, 10, 20	G
Stainless fibre	30 bar / 435 PSI		A
Filter paper	10 bar / 145 PSI	10, 20	N
Stainless mesh	30 bar / 435 PSI	25, 50, 100, 200	S

* Note: Collapse/burst resistance as per ISO 2941. Other materials on request.

④ Micron Rating

3 µm	03
5 µm	05
10 µm	10
20 µm	20
25 µm	25
50 µm	50
100 µm	100
200 µm	200

Note: Other micron ratings on request.

⑤ Sealing Material

NBR (Buna®)	B
FKM (Viton®)	V

Note: Other sealing materials on request

⑥ Design Code

Only for information	X

Differential Pressure Switch with Visual Gauge Indicator

The switch is used to indicate when the elements needs to be changed. The switch can turn on a light, shut down the machine or any further function controlled by an electrical signal.
The gauge visually indicates the differential pressure across the filter elements.





Diameter
- 100 mm / 3.94 in

Scale
- 0 ... 1,6 kg/cm^2

Connection Thread
- G1/4

Operating Pressure
- Max. 200 bar / 2900 PSI

Temperature Range
- -20 °C ... +80 °C / -4 °F ... +176 °F

Materials
- Body: Aluminium
- Lens: Glass
- Sealing Material: NBR (Buna-N®)
  FKM (Viton®)

Protection Rating
- IP 65: Dust tight and protected against water jets.

Switch Voltage
- Max. 28 V AC/DC

Current On Contact
- Max. 0,25 A

Contact Rating
- 5 VA AC/DC

In-Line Filters ▪ Type SRFL-S / D Flow Characteristics

The following characteristics are valid for mineral oils with a density of 0,85 kg/dm³ and the kinematic viscosity of 30 mm²/s (30cSt). The characteristics have been determined in accordance to ISO 3968. Multipass filter ratings have been obtained in accordance to ISO 16889. The housing pressure drop is directly proportional to the oil density. Contact STAUFF for details.

Housings SRFL-S/D-160/200

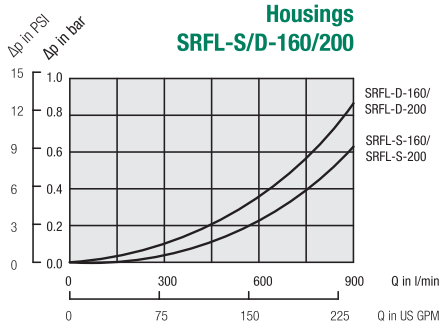

Filter Elements RE-160-A

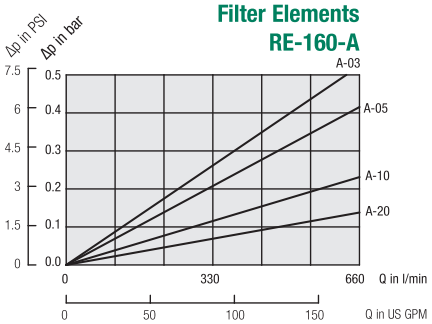

Filter Elements RE-160-G

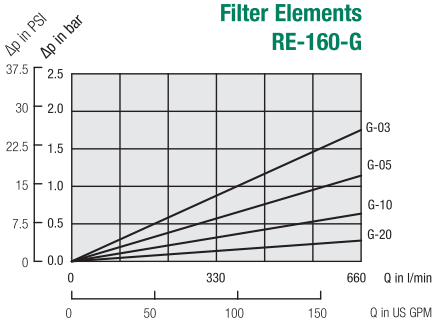

Housings SRFL-S/D-300/600

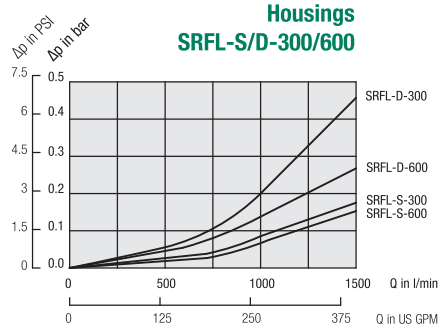

Filter Elements RE-200-A

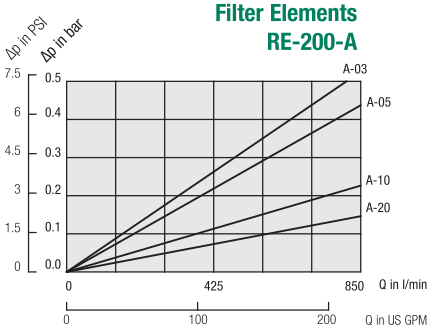

Filter Elements RE-200-G

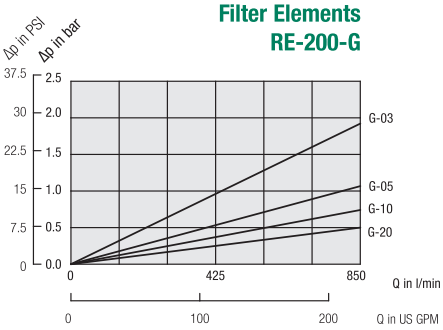

Housings SRFL-S/D-1200/1800

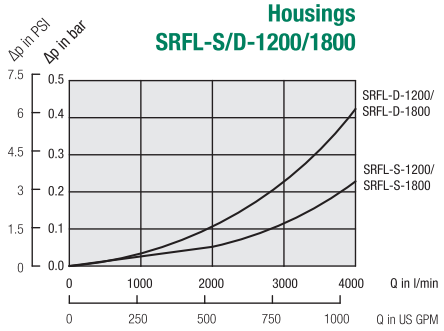

Filter Elements RE-300-A

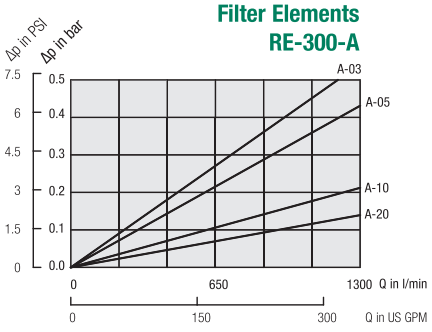

Filter Elements RE-300-G

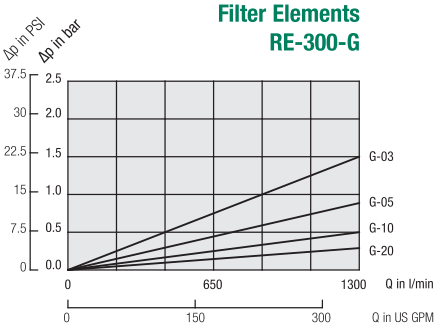

Housings SRFL-S/D-2400/3600

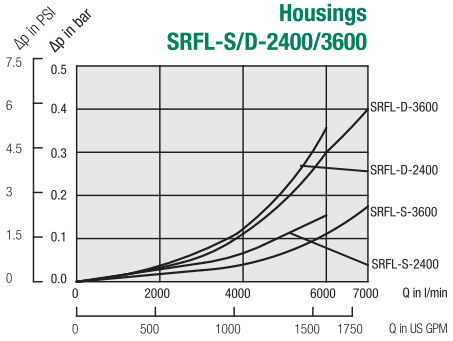

Filter Elements RE-600-A

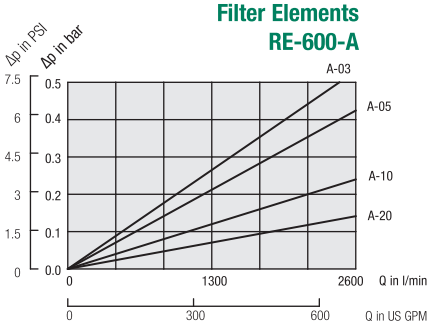

Filter Elements RE-600-G

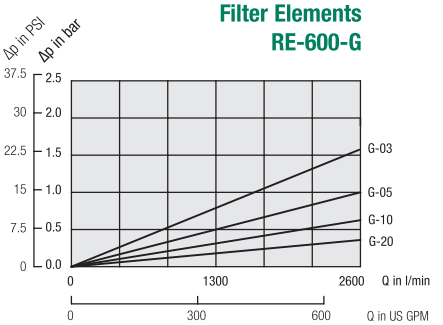

Pressure drop of housing including filter elements

General: $\Delta p_{total} = \Delta p_{hous} + \Delta p_{Elem}$ x (operating viscosity [mm²/s] / 30mm²/s)

with Δp_{hous} = See diagrams above

Δp_{Elem} = pressure drop of element at a flow Q/n (at a viscosity of 30 mm²/s and n= numbers of elements as listed in ordering code filter elements see page 140 and diagrams above.)

Example

Data given Q_{max} = 6000 l/min / 1585 US GPM, SRFL-D-2400 with filter elements RE-600-S-25-B; operating viscosity = 100 mm²/s

Q_{max} = 6000 l/min; n=4 elements (SRFL-D-2400) Q/n=1500 l/min / 396 gal

Δp_{hous} = 0,35 bar / 5.07 PSI, Δp_{Elem} =0,03 bar / 0.44 PSI

Pressure drop: Δp_{total} = 0,35 bar + 0,03 bar x (100 mm²/s / 30mm²/s)
= 0,45 bar / 6.53 PSI

Filter Elements RE-...S / RE-...N

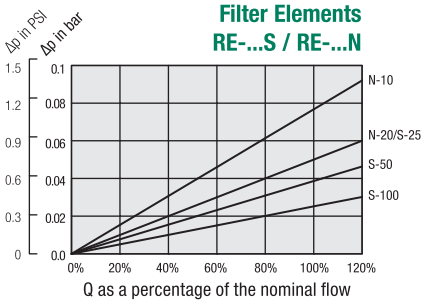

In-Line Filters ▪ Type SRFL-SW



E

Product Description

STAUFF In-Line Filters SRFL-SW are specially developed for direct installation into the pipelines of industrial water cycles. Depending on their size, SRFL-SW filter housings are suitable for nominal flow rates up to 13330 l/min / 3521 US GPM at a maximum operating pressure of 16 bar / 232 PSI. The SRFL-SW have been designed to be used in the steel industry for pre-filtering or coarse filtering in descaling plants. For use with demineralised water we recommend the In-Line Filters SRFL-SW in Stainless Steel. The filter element construction as a Stainless Steel basket screen filter ensures a long service life.

Technical Data

Construction
- Designed for direct installation into pipelines
- Simplex version, Duplex on request

Materials
- Filter housing: Carbon Steel
  Stainless Steel (on request)
- Sealing: PTFE / NBR (Buna-N®)
  PTFE / FKM (Viton®)

Port Connections
- ANSI or DIN flange

Operating Pressure
- Max. 16 bar / 232 PSI

Flow Rating
- Max. 13330 l/min / 3521 US GPM

Temperature Range
- -10 °C ... +100 °C / +14 °F ... +212 °F

Media Compatibility
- Water
- Coolant
- Others on request

Options and Accessories

Filter Elements
Stainless Steel basket screen filters from STAUFF's REL product line are used as filter elements, which are designed for flow from the inside to the outside. The filter elements are available in micron ratings between 50 µm and 200 µm. Solid particles collected in the basket are prevented from reaching the clean side of the water cycle when being replaced.

Clogging Indicator
- Differential Pressure Gauge
- visual / electrical / visual-electrical (see page 54)

Drain Valve
- Available as an option: Integrated into the filter housing

In-Line Filters ▪ Type SRFL-SW-160 /-300 /-600

Version with handle

* recommended space for element change

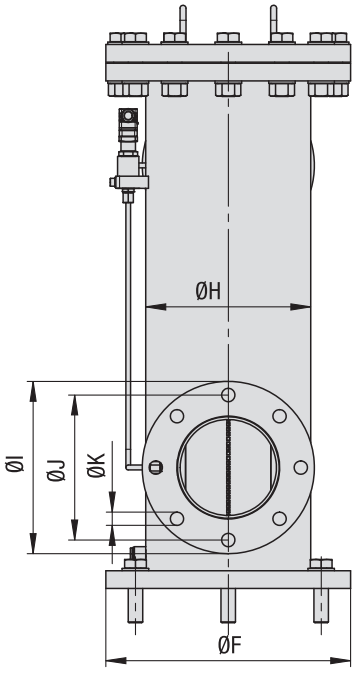

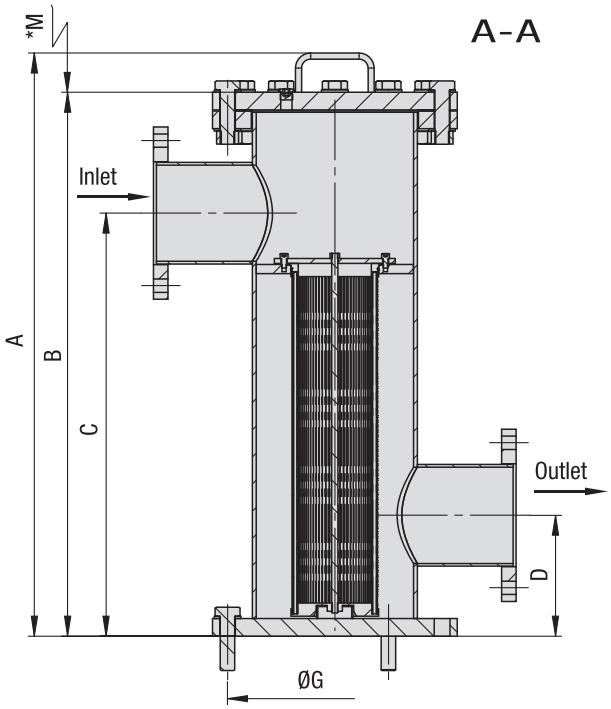

Detail arrangement of filter elements



SRFL-SW
-160
-300
-600

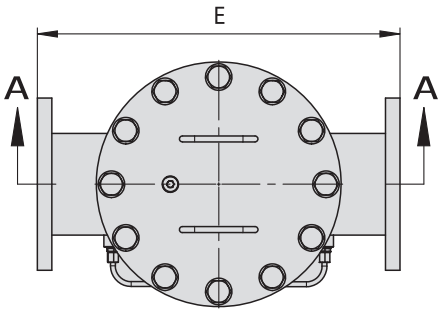

Flange Connection	Filter Size SRFL-SW		
	160	300	600
DIN	DN80	DN100	DN150
	DN50	DN125	-
ANSI	2	4	6
	3	5	-

Dimensions (mm/in)		Filter Size SRFL-SW		
		160	300	600
Filter Housing Material		CS/SS	CS/SS	CS/SS
A		840	965	965
		33.07	38.00	38.00
B		775	900	900
		30.51	35.43	35.43
C		600	700	700
		23.62	27.56	27.56
D		250	200	200
		9.84	7.87	7.87
E		440	500	600
		17.32	19.69	23.62
ØF		340	340	405
		13.39	13.39	15.94
ØG		295	295	355
		11.61	11.61	13.98
ØH		219,1	219,1	273
		8.63	8.63	10.75
ØI		200	220	285
		7.87	8.66	11.22
ØJ		160	180	240
		6.30	7.09	9.45
ØK		18	18	22
		.71	.71	.87
M		400	650	650
		15.75	25.60	25.60
Housing Capacity (l / US GPM)		26,2	31,3	52,9
		6.9	8.3	14
Filter Elements	Designation	REL-100	REL-100	REL-150
	Quantity	1	1	1

In-Line Filters ▪ Type SRFL-SW-850 /-1000 /-1250

Version with lifting device

* recommended space for element change

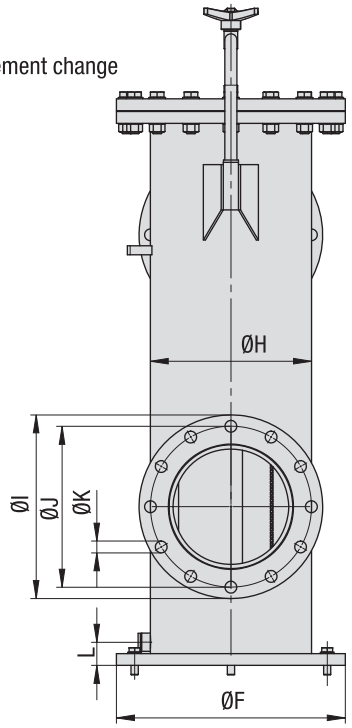

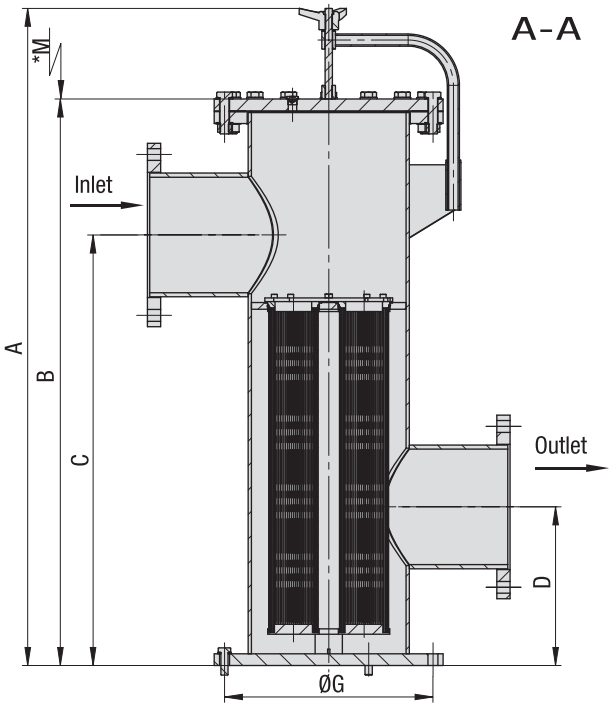

Detail arrangement for filter elements

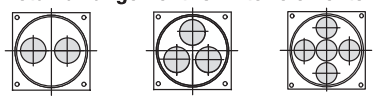

SRFL-SW-850 SRFL-SW-1000 SRFL-SW-1250

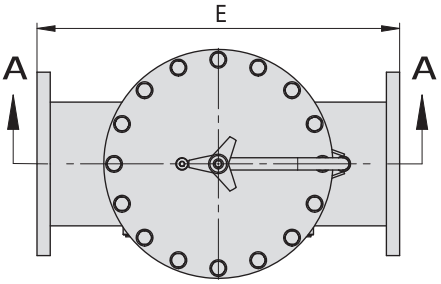

Flange Connection	Filter Size SRFL-SW		
	850	1000	1250
DIN	DN200	DN250	DN300
	DN150	-	-
ANSI	8	10	12
	-	-	-

Dimensions (mm/in)		Filter Size SRFL-SW				
		850		1000		1250
Filter Housing Material		CS	SS	CS	SS	
A		1154	1150	1442	1450	1950
		45.43	45.28	56.77	57.09	76.77
B		962	950	1250	1250	1740
		37.87	37.40	49.21	49.21	68.50
C		750	750	950	950	1400
		29.53	29.53	37.40	37.40	55.12
D		300	300	350	350	400
		11.81	11.81	13.78	13.78	15.75
E		700	700	800	800	1100
		27.56	27.56	31.50	31.50	43.31
ØF		520	505	520	505	640
		20.47	19.88	20.47	19.88	25.20
ØG		470	460	470	460	585
		18.50	18.11	18.50	18.11	23.03
ØH		355,6	355,6	355,6	355,6	508
		14.00	14.00	14.00	14.00	20.00
ØI		340	340	405	405	460
		13.39	13.39	15.94	15.94	18.11
ØJ		295	295	355	355	410
		11.61	11.61	13.98	13.98	16.14
ØK		22	22	26	26	26
		.87	.87	1.02	1.02	1.02
M		650	650	850	850	850
		25.59	25.59	33.46	33.46	33.46
L		55	51	55	51	82
		2.17	2.01	2.17	2.01	3.23
Housing Capacity (l / US GPM)		96,5	96,5	138,6	138,6	392
		25.5	25.5	36.6	36.6	103.6
Filter Elements	Designation	REL-150	REL-150	REL-250	REL-250	REL-250
	Quantity	2	2	3	3	5

In-Line Filter Housing / Complete Filters ▪ Type SRFL-SW

SRFL-SW - 300 - B - 200 - B - A - 0 - W132 - V - B / X

① ② ③ ④ ⑤ ⑥ ⑦ ⑧ ⑨ ⑩ ⑪

① Type

In-Line Filter Simplex Water	**SRFL-SW**

② Group

Flow	Size
650 l/min / 160 US GPM	**160**
1200 l/min / 300 US GPM	**300**
2500 l/min / 600 US GPM	**600**
6000 l/min / 1500 US GPM	**850**
8300 l/min / 2000 US GPM	**1000**
13330 l/min / 3300 US GPM	**1250**

③ Filter Material

Material	Micron Ratings Available	Code
Without filter element	-	**0**
Stainless mesh	50, 80, 100, 125, 200	**B**

④ Micron Rating

50 µm	**50**
80 µm	**80**
100 µm	**100**
125 µm	**125**
200 µm	**200**

Note: Other micron ratings on request.

⑤ Sealing Material

PTFE / NBR (Buna®)	**B**
PTFE / FKM (Viton®)	**V**

Note: Other sealing materials on request.

⑥ Connection Style

Connection Style	Group 160	300	600	850	1000	1250	Code
DIN flange	DN80	DN100	DN150	DN200	DN250	DN300	**D**
	DN50	DN125	-	DN150	-	-	**D1**
ANSI flange	2"	4"	6"	8"	10"	12"	**A**
	3"	5"	-	-	-	-	**A1**

⑦ Connection Location

Opposite side	**0**

⑧ Housing Material

Carbon Steel	**W132**
Stainless Steel	**W4**

⑨ Clogging Indicator

Without Clogging Indicator	**0**
Differential Pressure Gauge	**V**

Note: Other clogging indicators on request.

⑩ Drain Valve

Closed	**0**
Ball Valve	**B**

⑪ Design Code

Only for information	**X**

Filter Elements ▪ Type REL

Product Description

Stainless Steel basket screen filters from STAUFF's REL product line are used as filter elements, which are designed for flow from the inside to the outside. Micron ratings ranging from 50 µm to 200 µm are available. Solid particles collected in the basket are prevented from reaching the clean side of the water cycle when being replaced.
The filter element construction as a Stainless Steel basket screen filter ensures a long service life.

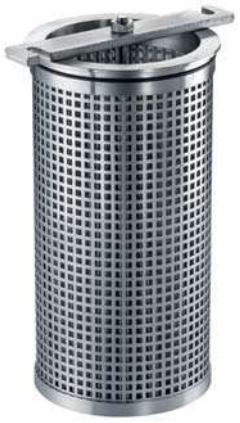

Order Code

REL - 150 - B - 200 - B / X

① ② ③ ④ ⑤ ⑥

① Type

Filter Element Series	**REL**

② Group

Designation	Number of Filter Elements	Size
REL-100	1	160
REL-150	1	300
REL-150	1	600
REL-150	2	850
REL-250	3	1000
REL-250	5	1250

③ Filter Material

Material	Max. Δp*Collapse	Micron Ratings Available	Code
Stainless mesh	10 bar / 145 PSI	50, 80, 100, 125, 200	**B**

④ Micron Rating

50 µm	**50**
80 µm	**80**
100 µm	**100**
125 µm	**125**
200 µm	**200**

⑤ Sealing Material

NBR (Buna®)	**B**
FKM (Viton®)	**V**

⑥ Design Code

Only for information	**X**

Differential Pressure Gauge



A visual clogging indicator, the function of which is based on the differential pressure between the contaminated and clean side of the filter elements, is available as an option, and enables a convenient determination of the condition of the basket filter.

Nominal Size
- 80 mm / 3.15 in

Range of Scale
- 0 ... 1 bar / 0 ... 14.5 PSI

Operating Pressure
- Max. 100 bar / 1450 PSI

Permissible Temperatures
- Ambient: 0 ... +60 °C / 0 ... +140 °F
- Media: up to +100 °C / +212 °F

Material
- Housing: Die-cast Aluminium, black
- Sight glass: Acrylic
- Indicator: Aluminium, black

Protection Rating
- IP 54 protection rating: Dust protected and protected against splashing water