Product Data Sheet

Equal Elbow Connectors (P Range)

a

b c



Applications	
Drinks Dispense	✓
Pure Water	✓
Pneumatics	✓

The John Guest P Range Equal Elbow Connectors have been developed for a wide range of applications involving foodstuffs, potable liquids and air.

Working Temperatures and Pressures

-20˚C to +70˚C at 10 Bar max.

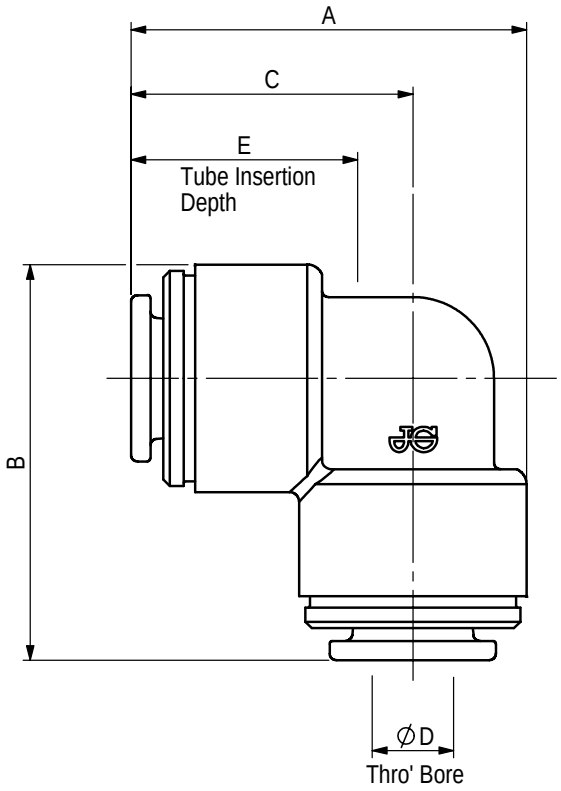

Product No.	Description	A	B	C	∅D	E
PM0304E	4mm Tube O/D	24	24	18	2.5	14.3
PM0305E	5mm Tube O/D	24	24	18	3.5	14.3
PM0306E	6mm Tube O/D	27	27	20	5.0	15.7
PM0308E	8mm Tube O/D	30	30	21	7.5	16.7
PM0310E	10mm Tube O/D	35	35	25	8.5	19.7

Part Description	Material
Body	Acetal Co-Polymer (Unfilled), Black
Collets	Acetal Co-Polymer (Unfilled), Black / Stainless Steel
'O' Rings	Nitrile, Black

All Dimensions in mm

THE COPYRIGHT IN THIS DRAWING AND THE PRODUCTS REFERRED THEREON BELONG TO JOHN GUEST INTERNATIONAL LIMITED AND THIS DRAWING NOR THE INFORMATION CONTAINED HEREIN SHALL BE PRODUCED IN ANY FORM OR USEDFOR ANY PURPOSE WITHOUT WRITTEN CONSENT © 2005

The company has a policy of continuous research and developmentand reserves the right to amend without notice the specificationand design of all products illustrated. For details of terms and conditions and any other technical enquiries, please contact ourCustomer Services Department.

JGE 2095/DS JAN 05

ECN17806

ISSUE 3 03-10-05

DS-123

ECN17806
REDRAWN IN SOLIDWORKS - PM0315E & PM0312E HAVE THEIR OWN DATA SHEETS DS-PM0315E & DS-PM0312E

ISSUE	DATE DRAWN	DATE ISS.	DRN. BY	ISS. BY	ECN	CHECKED	APPROVED
3	03-10-05	03-10-05	TB	TB	17806	DAP	DAP

DATA SHEET No.	DS-123
TITLE	P. RANGE EQUAL ELBOW CONNECTORS

Location: CCL-SA-SPE01
Release Number: 081111-C-CIFM
CURRENT PRODUCTION
User: roses
Printed/Downloaded: 28 May 08,16:50
UNCONTROLLED IF PRINTED OR DOWNLOADED