IO5016

Inductive sensor

IOW2010-ARKG/UP/US-100 RT

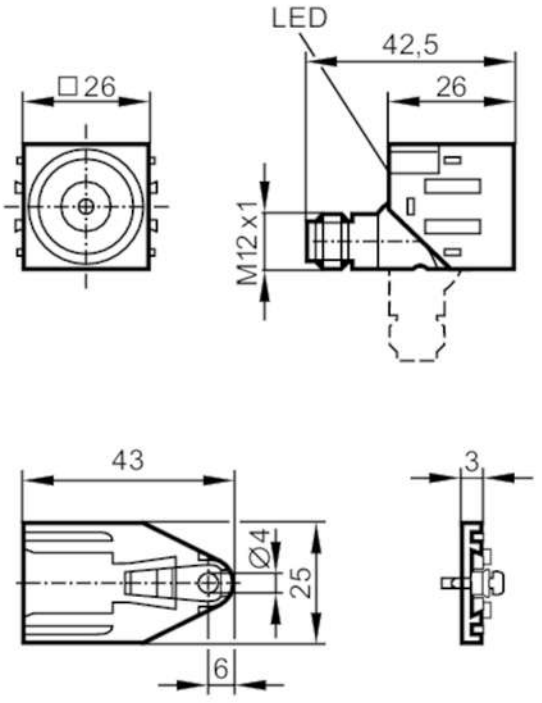

1 snap-fit mounting

Product characteristics		
Electrical design		PNP/NPN
Output function		normally open
Sensing range	[mm]	10
Housing		rectangular
Dimensions	[mm]	26 x 26 x 43
Electrical data		
Operating voltage	[V]	10...36 DC
Protection class		II
Reverse polarity protection		yes
Outputs		
Electrical design		PNP/NPN
Output function		normally open
Max. voltage drop switching output DC	[V]	4.6
Minimum load current	[mA]	2
Max. leakage current	[mA]	0.6
Permanent current rating of switching output DC	[mA]	100
Switching frequency DC	[Hz]	250
Short-circuit protection		yes
Type of short-circuit protection		pulsed

IO5016

Inductive sensor

IOW2010-ARKG/UP/US-100 RT

Overload protection		yes	
Detection zone			
Sensing range	[mm]	10	
Real sensing range Sr	[mm]	10 ± 10 %	
Operating distance	[mm]	0...8.1	
Accuracy / deviations			
Correction factor		steel: 1 / stainless steel: 0.7 / brass: 0.5 / aluminium: 0.4 / copper: 0.3	
Hysteresis	[% of Sr]	1...15	
Switch point drift	[% of Sr]	-10...10	
Operating conditions			
Ambient temperature	[°C]	-25...70	
Protection		IP 67	
Tests / approvals			
EMC		EN 60947-5-2	
		EN 55011	class B
MTTF	[years]	2577	
Mechanical data			
Weight	[g]	45.78	
Housing		rectangular	
Mounting		flush mountable	
Dimensions	[mm]	26 x 26 x 43	
Materials		PA	
Displays / operating elements			
Display		switching status	1 x LED, red
Accessories			
Items supplied		head cap screw: 1 x M4 x 12	
Remarks			
Pack quantity		1 pcs.	

Electrical connection - plug

Connector: 1 x M12; coding: A; Locking: rotatable



IO5016

Inductive sensor

IOW2010-ARKG/UP/US-100 RT

Connection

