AL2330

IO-Link CompactLine module

IO-Link Module 6x2 DO M12 IP67

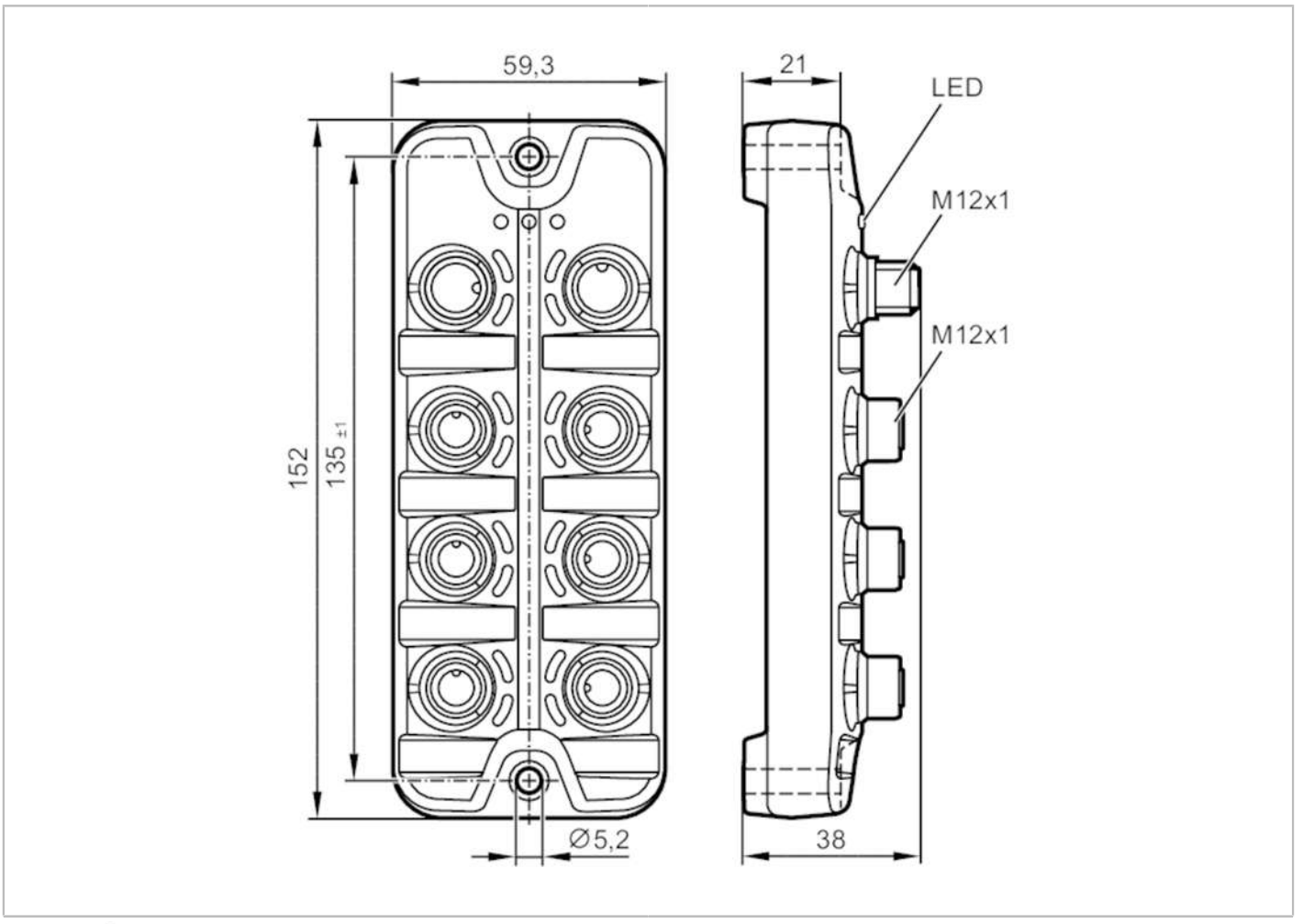

Application		
Application		I/O modules for field applications
Electrical data		
Operating voltage	[V]	18...30 DC; (US)
Current consumption	[mA]	50; (US)
Protection class		III
Additional voltage supply	[V]	18...30 DC; (UA)
Max. current consumption from additional supply	[mA]	3600; (UA)
Inputs / outputs		
Number of inputs and outputs		Number of digital outputs: 12
Outputs		
Number of digital outputs		12; (6 x 2)
Output function		PNP
Max. current load per output	[mA]	1800
Max. current load outputs total	[A]	3.6; (Max. current load per output side: 1800 mA)
Electrically separated		yes

AL2330

IO-Link CompactLine module

IO-Link Module 6x2 DO M12 IP67

Interfaces			
Communication interface		IO-Link	
Supported DeviceIDs		**Type of operation**	**DeviceID**
		default	893
IO-Link Device			
Transmission type		COM2 (38,4 kBaud)	
IO-Link revision		1.1	
SDCI standard		IEC 61131-9	
SIO mode		no	
Min. process cycle time	[ms]	5.6	
Operating conditions			
Ambient temperature	[°C]	-25...60	
Storage temperature	[°C]	-25...70	
Max. relative air humidity	[%]	90	
Max. height above sea level	[m]	2000	
Protection		IP 65; IP 67	
Protection rating (NEMA 250)		6P	
Pollution degree		2	
Chemical media		ISO 16750-5	AA, BA, BD, HLP, CC, DB, DC, DD, CA
		NEMA 250 5.13.1	AA
Tests / approvals			
EMC		EN 61000-6-2	
		EN 61000-6-3	
		IEC 61131-9	
Shock resistance		DIN EN 60068-2-27	
Vibration resistance		DIN EN 60068-2-64	
		DIN EN 60068-2-6	
MTTF	[years]	63	
Mechanical data			
Weight	[g]	303	
Dimensions	[mm]	26 x 59.3 x 152	
Materials		housing: PA; socket: brass nickel-plated	
Sealing material		FKM	
Displays / operating elements			
Display		operation	LED, green
		errors	LED, red
		function	LED, yellow
Accessories			
Accessories (optional)		Protective caps M12	
Remarks			
Pack quantity		1 pcs.	

AL2330

IO-Link CompactLine module

IO-Link Module 6x2 DO M12 IP67

Electrical connection - IO-Link

Connector: M12; coding: A

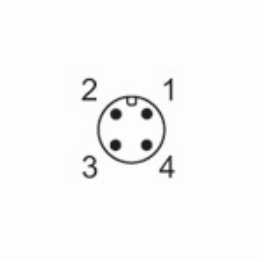

X1

1	+ 24 V DC (US)
2	not used
3	GND (US)
4	IO-Link

Electrical connection - Outputs

Connector: M12; coding: A; Sealing: FKM

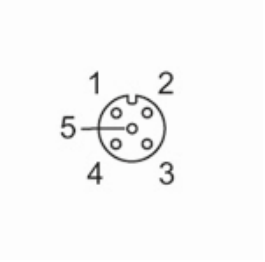

X1.0...X1.5

1	not used
2	DO2
3	GND (UA)
4	DO1
5	not used

Electrical connection - power supply

Connector: M12; coding: A



X31

1	+ 24 V DC (UAL)
2	GND (UAR)
3	GND (UAL)
4	+ 24 V DC (UAR)