SEPT
2012

Fenner Drives®

Keyless Locking Devices



Trantorque®

B-LOC®

Fenner Drives Trantorque® & B-LOC® Keyless Locking Devices: Power and Precision

Fenner Drives, a worldwide leader in mechanical power transmission and motion control solutions, is pleased to present our comprehensive line of Keyless Locking Devices. Only Fenner Drives delivers a product line that offers you quick and easy installation with Trantorque plus the design flexibility and extra heavy duty capacity with B-LOC.

Backed by North America's largest inventory of product ready for same-day shipment, the best customer service support in the industry, and the engineering expertise and manufacturing agility to provide custom solutions, Fenner Drives Keyless Locking Devices always deliver on this promise: The key to better machine design is no key at all!

TABLE OF CONTENTS

Traditional Connection Methods 4
Why Go Keyless 5
Selection Assistance 6
Application Examples 8
Made To Order (MTO) 12

TRANTORQUE & B-LOC

Engineering Information —
Keyless Bushings 14
Hub Sizing 16
Technical Data — Trantorque 18
Technical Data — B-LOC 28
Engineering Information —
Specialty Locking Devices 42
Technical Data — Shrink Discs 43
Technical Data — WK Series 52
Rigid Shrink Disc Couplings 53
Trantorque Installation Wrenches 54
Application Data Sheet 55

Trantorque®



Trantorque® GT ..... page 18
- Designed with external counter-torque flange
- Exceptional concentricity and ability to transmit bending loads
- Limited axial movement during installation



Trantorque Mini ..... page 22
- Designed for shafts as small as 1/8" or 3mm
- Exceptional concentricity and ability to transmit bending loads
- Limited axial movement during installation



Trantorque OE ..... page 24
- Minimal OD/ID ratio
- Exceptional concentricity and ability to transmit bending loads
- Limited axial movement during installation



Trantorque NT ..... page 26
- Designed specifically to eliminate axial movement completely during installation
- Exceptional concentricity and ability to transmit bending loads



Trantorque S ..... page 27
- Short units ideal for mounting narrow hub components
- Exceptional concentricity and ability to transmit bending loads
- Limited axial movement during installation

Standard Trantorque units can also be supplied as follows:

- *Electroless Nickel Plated Steel (EN) for corrosion protection in washdown and hostile environments*
- *Thin Dense Chrome (TDC) Coated Steel for excellent corrosion protection without decreased torque transmission performance.*
- *Stainless Steel for ultimate corrosion protection in washdown and hostile environments*

B-LOC®



Series B112, B115 & B113 ..... page 28

- Wide, double taper design for enhanced bending moment capacity
- Exceptional concentricity with thru-bored hubs
- No axial movement during installation
- Available in Standard, Heavy and Extra-Heavy Duty models



Series B117 ..... page 32

- Shorter length than other locking assemblies with two tapers
- Exceptional concentricity and ability to transmit bending loads
- High bending moment capacity ($M_b = 0.65 \times M_t$)
- Continuous inner promotes ease of removal
- No axial movement during installation



Series B109 ..... page 33

- Designed for shafts as small as 1/4" or 6mm
- Shallow, single taper design with integrated push-off threads
- Exceptional concentricity and ability to transmit bending loads
- No axial movement during installation



Series B106 ..... page 34

- Shallow, single taper design with integrated push-off threads
- Exceptional concentricity and ability to transmit bending loads
- Use optional integrated spacer sleeve to mount narrow hub components
- No axial movement during installation



Series B103 ..... page 36

- Shallow, single taper design with integrated push-off threads
- Exceptional concentricity and ability to transmit bending loads
- Limited axial movement during installation



Series B800 ..... page 38

- Shallow, single taper design
- Exceptional concentricity
- Thin, extra wide sleeves provide low contact pressures allowing for smaller diameter hubs
- Integrated spacer sleeve eliminates axial movement during installation
- Minimal OD/ID ratio



Series B400 ..... page 40

- Self-releasing, double taper design permits simple adjustment and removal
- Not self-centering. Available pilot bushings provide pre-centering when required
- No axial movement during installation



Series 10, 20 & 30 Shrink Discs ..... page 43

- External locking device
- Provides extremely concentric and well-balanced mechanical interference fit
- Offered in Standard, Light, and Heavy Duty series
- Also available in Split and Half Shrink Disc designs (see page 45)



Series 40 Shrink Discs ..... page 50

- External locking device
- Easy and quick installation with no torque wrench required
- High torque performance and dynamic balance



WK Shaft Couplings ..... page 52

- Rigid shaft coupling
- External locking device
- Transmits high torque and bending moments using the same principles as the Shrink Disc

Fenner Drives Keyless Locking Devices

From the moment the wheel came into existence, man has been faced with the seemingly simple task of mounting his invention to a shaft so that something useful could be accomplished. Though it has been over 5,500 years since these rotating components have made their way into use, many designs still utilize mounting methods not much improved from the days of antiquity. These traditional connection methods include: interference fits (shrink or press), keys and keyways, splines and quick detachable bushings. In the sections that follow, we compare and contrast these component mounting techniques and explain the principles behind the ingenious Fenner Drives Keyless Locking Device.

Traditional Connection Methods

Interference Fits (Shrink and Press)

A shrink fit is a procedure whereby thermal expansion is used to facilitate a mechanical interference fit between two pieces of metal, such as a steel shaft and hub. Often, extreme heat is applied to the hub, causing it to expand and increasing the size of its machined bore. The expanded hub is removed from the heat source and quickly positioned onto the shaft. As the hub cools, its bore contracts back to its original machined dimension, effectively "shrinking" the hub onto the shaft.

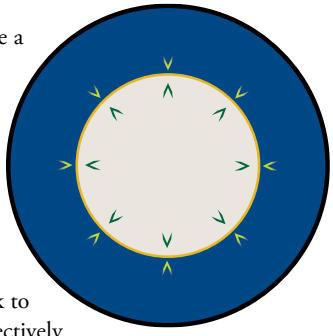

Shrink/Press

A press fit achieves the same end as a shrink fit — a mechanical interference fit between a steel shaft and hub — but does so through different means. Press fits rely on the application of simple brute force to "press" the hub onto the shaft.

Interference fits offer several advantages, such as zero backlash and uniform fit pressures, but these advantages come at a price. High capacity interference fits require long fit lengths, close tolerances, expensive and sometimes hazardous heat sources or hydraulic presses, and field maintenance is extremely difficult. Finally, separated components can rarely be re-used.

Keys, Keyways & Splines

The centuries-old industry standard shaft-to-hub mounting technique is the key and keyway. While ubiquitous and intuitively easy to understand, the key and keyway is a remarkably ineffective technology. Machining a keyway into a shaft is not inexpensive, nor is the equipment required to do so, though these costs are often unknown or overlooked. Keyways introduce notch factors, which account for the reduced effective cross section and abridged fatigue life that occurs when a shaft is keyed and lead, in turn, to systematic over-sizing of shaft diameters. This translates to more shaft material and weight, larger bearings and other drive components, and increased cost.

Further, keyed connections require fit clearance for assembly, both between key and keyway and between shaft and hub.

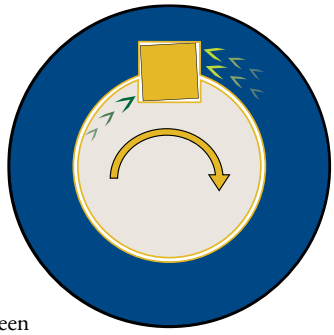

Key & Keyway

The combined effect of these clearances is backlash. In applications with frequent starts/stops, direction changes, and/or shock overloads, this backlash can lead to wallowed out keyways, fatigue failures, fretting corrosion or some combination of these failure modes. Nor do keys and keyways lend themselves to motion control applications, since backlash erodes the accuracy of motion profiles over time.

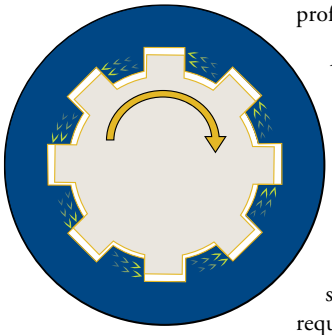

Spline

A splined connection is simply a series of keys and keyways that suffers the same limitations and drawbacks associated with a single keyed connection. Manufacturing costs are high, especially on hollow shafts, and special surface treatment is often required to increase strength.

Keyed Bushing Systems

Both QD and Taper-Lock® bushing and weld-on hub systems are popular component mounting technologies. Yet both are ultimately keyed connections and as a result suffer from the same operational drawbacks as described above. As their name indicates, the weld-on hubs require an additional, and expensive, manufacturing step. And while the bushings can be used without a weld-on hub, doing so requires machining a taper and drilling and tapping holes in the mating part.

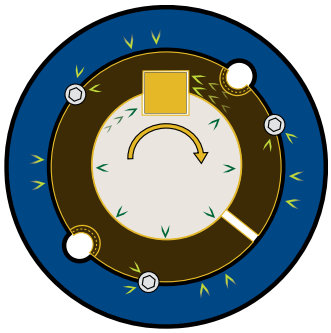

Taper-Lock

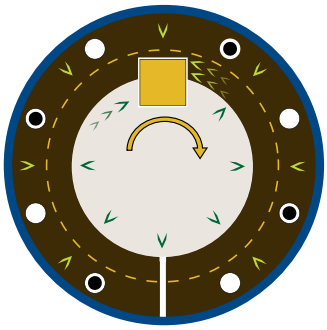

QD

Why Go Keyless

Today's global marketplace demands precise, efficient machines that optimize productivity while minimizing material and fabrication costs. When compared to traditional connection methods, Fenner Drives Keyless Locking Devices offer the following advantages:

- A mechanical interference fit with a uniform pressure distribution similar to that achieved through a shrink or press fit.
- A true zero backlash shaft-to-hub connection with none of the operational drawbacks of keyways or splines.
- The ability to mount on plain shafting, which need not be over-sized to compensate for notch factors. This allows the use of smaller shafts and bearings for more cost effective designs.

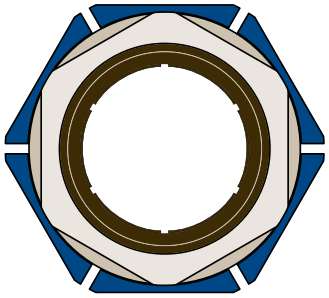

Trantorque®

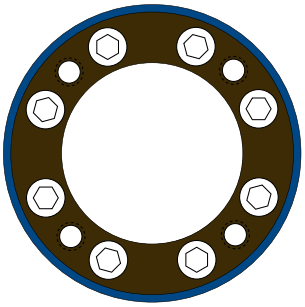

B-LOC®

- The flexibility to mount over existing keyways if desired.
- Straight bore machining of the mounted component, generous machining tolerances and as-turned surface finishes.
- Complete axial and radial adjustability.
- Simple installation, adjustment and removal, even in the field.

Principles of Operation

Though offered in many shapes and sizes, Fenner Drives Keyless Locking Devices all operate using the simple wedge principle. An axial force is applied — by either a hex nut or a series of annular screws — to engage circular steel rings with mating tapers. In the case of keyless bushings, the resulting wedge action creates a radial force on the tapered rings, one of which contracts to squeeze the shaft while the other expands and presses into the component bore.

In the case of specialty locking devices, similar tapered geometry generates a radial force that is concentrated (in the case of our Shrink Discs) around a solid hub, squeezing so tightly that the hub "shrinks" onto the underlying shaft, or (in the case of our WK Series Couplings) simultaneously onto two solid shaft ends to form a high-capacity rigid coupling.

In all cases, the product of the radial force applied to the shaft, the radius of that shaft and the coefficient of friction between the surfaces being joined equals the rated torque capacity of the connection.

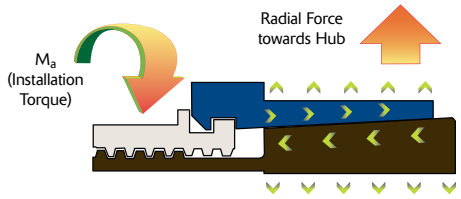

Trantorque Keyless Bushings

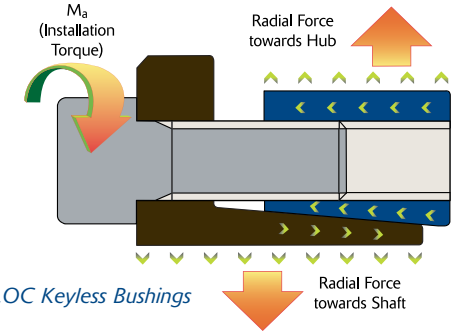

B-LOC Keyless Bushings

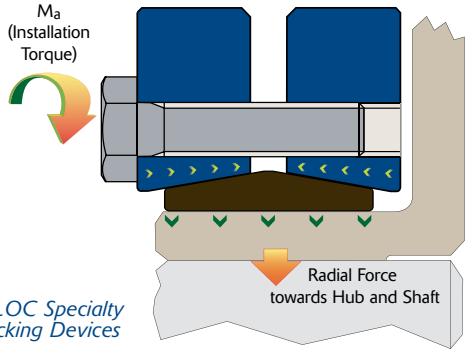

B-LOC Specialty Locking Devices

Comparison Chart	Trantorque	B-LOC	Interference Fit	Keyed Connection	Splined Connection	QD or TL Bushings
Keyless frictional connection	❋	❋	●			
Infinite angular and axial adjustment	❋	❋				
Easy installation	❋	❋		●	●	●
Easy removal	❋	❋				●
Backlash free connection	❋	❋	●			
Transmits shock and torque reversals	❋	❋	●			
Transmits reversing bending moments	❋	❋	●			

Trantorque® or B-LOC®: the Enduring Question

Once you have decided that a keyless locking device is the right solution, your next big decision is which series of Fenner Drives Trantorque or B-LOC Keyless Locking Device to choose. While the underlying engineering principle for both Trantorque and B-LOC is exactly the same, the functionality of each may appeal to different applications and situations.

SELECTION ASSISTANCE	Shaft Size Range	Overall Length Range	Torque Transmission	Axial Movement	Self Centering	Concentricity
Trantorque GT	⅝ — 3 in; 15 — 75mm	1½ — 4¼ in; 38.1 — 108mm	153 — 1,444 ft lb; 196 — 1,939 Nm	~0.075 in (1.9mm)	Yes	Excellent
Trantorque Mini	⅛ — ⅝ in; 3 — 16mm	¾ — 1⅛ in; 19 — 29mm	91 — 1,234 in lb; 10 — 140 Nm	~0.045 in (1.1mm)	Yes	Excellent
Trantorque OE	1 1/16 — 1½ in; 17 — 35mm	1 5/32 — 1 25/32 in; 29 — 43mm	162 — 492 ft lb; 211 — 658 Nm	~0.075 in (1.9mm)	Yes	Excellent
Trantorque NT	3/16 — 2 in	1 1/16 — 4 3/64 in	7 — 561 ft lb	No	Yes	Excellent
Trantorque S	3/16 — 1¾ in	⅝ — 1½ in	10 — 542 ft lb	~0.075 in (1.9mm)	Yes	Excellent
B-LOC B112	1 — 8 in; 24 — 600mm	1.575 — 5.866 in; 40 — 203mm	600 — 110,469 ft lb; 755 — 1,756,139 Nm	No	Yes	Excellent
B-LOC B115	2¾ — 8 in; 70 — 600mm	2.441 — 4.134 in; 62 — 160mm	5,261 — 70,109 ft lb; 7,118 — 1,228,856 Nm	No	Yes	Excellent
B-LOC B113	180 — 560mm	231 — 280mm	223,566 — 2,342,897 Nm	No	Yes	Excellent
B-LOC B117	180 — 600mm	122 — 178mm	87,000 — 1,080,000 Nm	No	Yes	Excellent
B-LOC B109	¼ — 1⅜ in; 6 — 35mm	0.650 — 1.102 in; 16.5 — 28.5mm	167 — 5,929 in lb; 19 — 683 Nm	No	Yes	Excellent
B-LOC B106	⅝ — 8 in; 14 — 400mm	0.846 — 2.559 in; 20.5 — 116mm	55 — 37,959 ft lb; 68 — 372,590 Nm	No	Yes	Excellent
B-LOC B103	¾ — 8 in; 15 — 400mm	1.122 — 2.559 in; 21.5 — 116mm	247 — 48,913 ft lb; 115 — 489,701 Nm	~0.032 in (0.8mm)	Yes	Excellent
B-LOC B800	¼ — 4 15/16 in; 6 — 130mm	0.866 — 5.039 in; 22 — 128mm	16 — 18,362 ft lb; 22 — 25,742 Nm	No	Yes	Excellent
B-LOC B400	¾ — 8 in; 18 — 500mm	0.787 — 2.047 in; 20 — 102mm	234 — 53,827 ft lb; 302 — 814,734 Nm	No	No	Fair
Shrink Discs	⅝ — 21.26 in; 15 — 540mm	0.71 — 11.26 in; 22 — 286 mm	139 — 3,267,568 ft lb	No	Yes	Excellent

	Balance	Self-Locking Tapers	Recessed Installation Without Counterbore	RoHS Compliant
	Excellent	Yes	No	Yes
	Very Good	Yes	No	Yes
	Excellent	Yes	No	Yes
	Very Good	Yes	No	Yes
	Very Good	Yes	No	Yes
	Excellent	Yes	Yes	Yes
	Excellent	Yes	Yes	Yes
	Excellent	Yes	Yes	Yes
	Excellent	Yes	No	Yes
	Excellent	Yes	No	Yes
	Excellent	Yes	No	Yes
	Excellent	Yes	Yes	Yes
	Excellent	Yes	No	Yes
	Very Good	No	Yes	No
	Excellent	No	N/A	No

Internal or External

At the broadest level, Keyless Locking Devices may be split into two categories, Keyless Bushings (internal) and Specialty Locking Devices (external). Selection among Specialty Locking Devices is relatively straightforward. If you are joining two solid shafts at their ends, see page 52 for details on our B-LOC WK Series Rigid Couplings. To connect most industry standard coupling hubs or flanges, gearboxes with hollow output shafts, or certain other similarly configured power transmission components, a B-LOC Shrink Disc may be best suited; see page 43.

Most applications, however, consist of a shaft and bored component that require the use of a keyless bushing. Many more factors play into the proper selection of a keyless bushing and are briefly addressed below and in the accompanying table.

Shaft Size

Shaft size may immediately determine whether you use a Trantorque or B-LOC Keyless Bushing. A Trantorque can accommodate shaft sizes as small as 1/8" (3mm) while the smallest shaft a B-LOC will fit is 1/4" (6mm). At the other end of the spectrum, Trantorque tops out at 3" (75mm) and the largest B-LOC will accommodate shafts approaching 24" (600mm). Larger and smaller versions of all units may be available as MTOs (Made To Order).

As a practical matter, under most circumstances our Applications Engineers will recommend a Trantorque for shaft sizes 1-1/2" and under and a B-LOC for shaft sizes 2" and over. These are considered the optimal ranges for the product lines, taking maximum advantage of each product's unique installation method. Between these ranges, selection will most likely be driven more by other application factors.

Installation

The most obvious difference when comparing a B-LOC to a Trantorque Keyless Bushing is the installation method. All B-LOC units use a plurality of screws; all Trantorque units use a single hex nut. Your particular application will be your guide as to which method is preferred.

The advantages of a single hex nut, as used in a Trantorque Keyless Bushing, are speed and simplicity of installation and removal. For installation, simply tighten the single hex nut to the specified installation torque and your connection is complete. Removal is just as straightforward. Merely loosen the same hex nut and the unit will disengage. The cost for this simplicity is a relatively high installation torque requirement, which may present a challenge for larger units.

Since the force needed to draw the mating tapers of a B-LOC Keyless Bushing together is distributed among many screws, the installation torque of an individual screw is relatively low. This allows for effortless installation of even the largest units. The price paid for this low installation torque is a more timely and complex installation and removal process. The screws must be slowly and equally tightened in series until the final installation torque is achieved. Since most B-LOC units have self locking tapers, the removal process requires loosening all screws and backing off the unit.

Other Considerations

There are several other design points that may help guide you in your selection process. OD to ID ratios vary widely from product to product. If your design requires a small OD/ID ratio, consider either a B-LOC B800 or a Trantorque OE. While all Fenner Drives Keyless Bushings are designed to transmit high torque loads, if you have an extremely demanding application, a double taper B-LOC B112, B113 or B115 may be required. If you are mounting plate sprockets or other thin components, a Trantorque S could be the solution. Other factors to consider include axial movement, recessed installation, corrosion protection, and RoHS compliance. The table is designed to help make your selection process easier, but if you are ever in doubt, please contact a Fenner Drives Applications Engineer. We will be happy to guide you to the perfect keyless locking device solution.

Fenner Drives Keyless Locking Devices

From precision medical devices to powerful turbines, Fenner Drives Keyless Locking Devices are perfectly suited for use in any industry where there is a need to mount a component to a shaft. Every day, our customers find unique uses for the engineering elegance of our keyless locking devices. The application examples shown are just a small sampling of the many thousands of possible applications for Fenner Drives Keyless Locking Devices. So ask yourself, "What do I need to mount today?"

Trantorque®

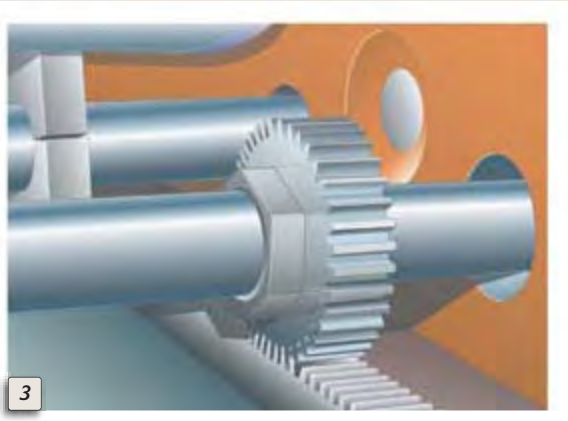
3


1


4

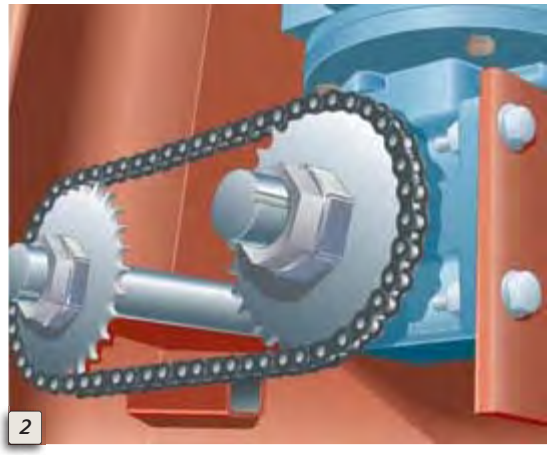
2

1 Trantorque GT connects a timing pulley to shaft on a canning machine.

2 Trantorque GT mounts a roller chain sprocket to a keyless reducer output shaft.

3 Trantorque OE ensures zero backlash on a rack and pinion drive.

4 Trantorque GT is perfect for high speed, low torque applications where balance is critical, as on this fan hub.



5

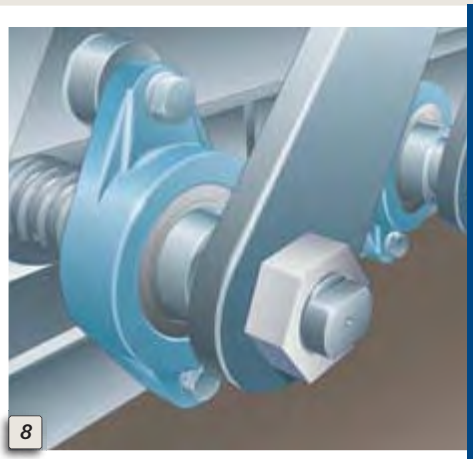

8



6

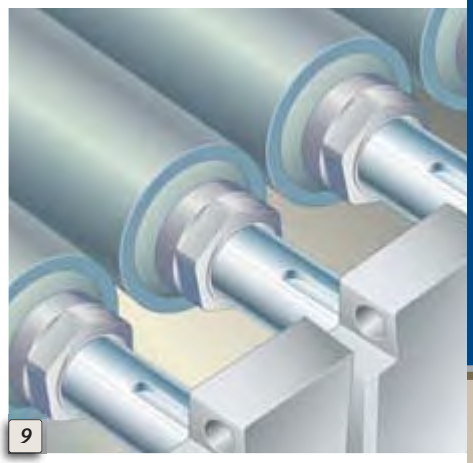

9



7

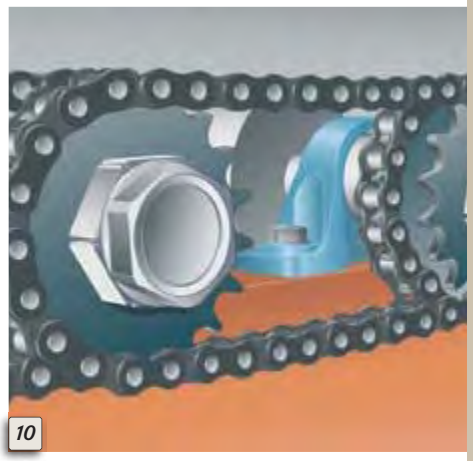

10

5 Trantorque GT connects a synchronous belt pulley to rear wheel of hybrid vehicle (transparent view).

6 The Trantorque GT units on this battling robot allowed the designers to eliminate keys and keyways, resulting in a lighter yet stronger machine.

7 Trantorque Mini provides a solution for mounting components in tight spaces on very small shafts, such as for this timing pulley on a linear slide.

8 Trantorque S positions a series of lever arms, greatly simplifying installation and timing.

9 Trantorque NT allows worn conveyor rolls to be replaced quickly and easily.

10 This Trantorque GT — like all of our keyless bushings — features infinite angular positioning, making timing of this run-out table chain drive quick and easy.

B-LOC®



1 B-LOC B106 Keyless Bushing connects a previously welded pin assembly on drilling rig.

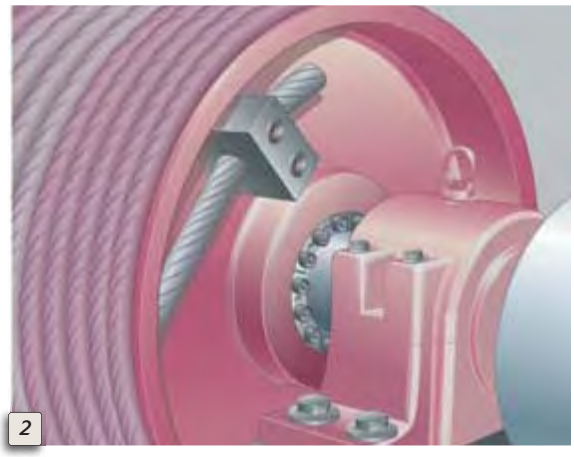

2 Heavy Duty B112 connects large draw works drum on offshore oil platform.



3 B-LOC Shrink Discs and WK Series Rigid Couplings facilitate torque-arm mounting of hydraulic drives directly onto the driven shaft, eliminating more expensive and less reliable flexible coupling arrangements.

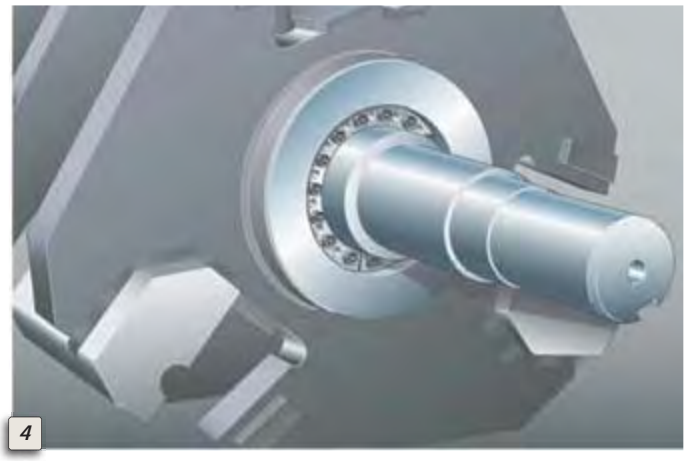

4 Heavy Duty B112 mounts rotor on an aggregate impact crusher.

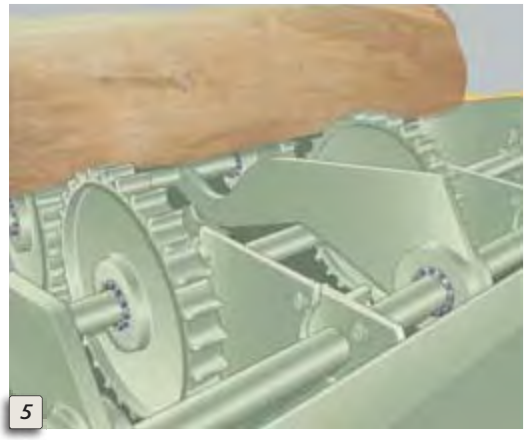

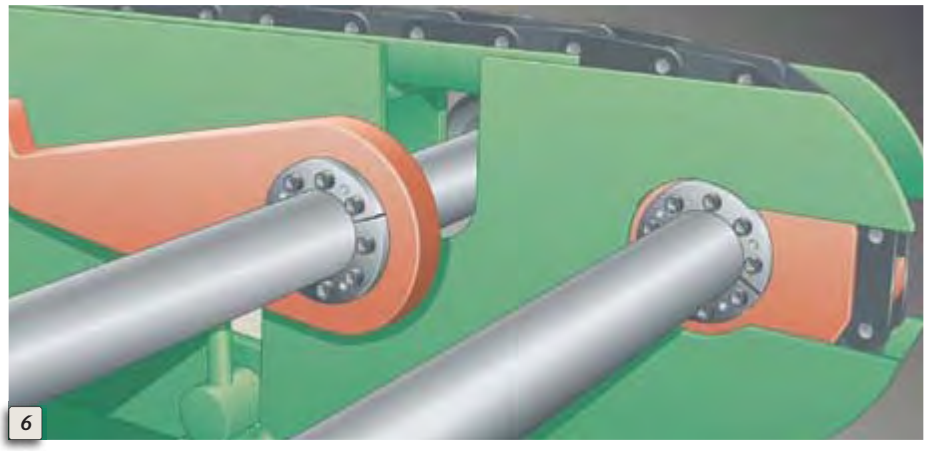

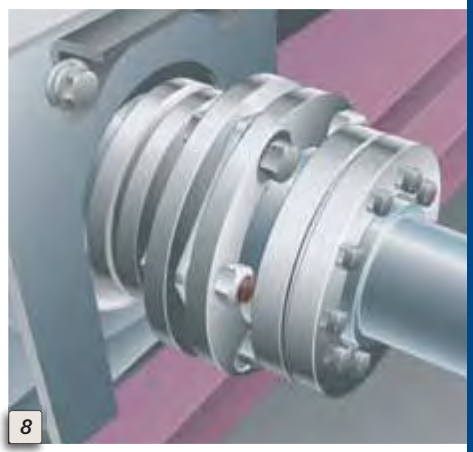

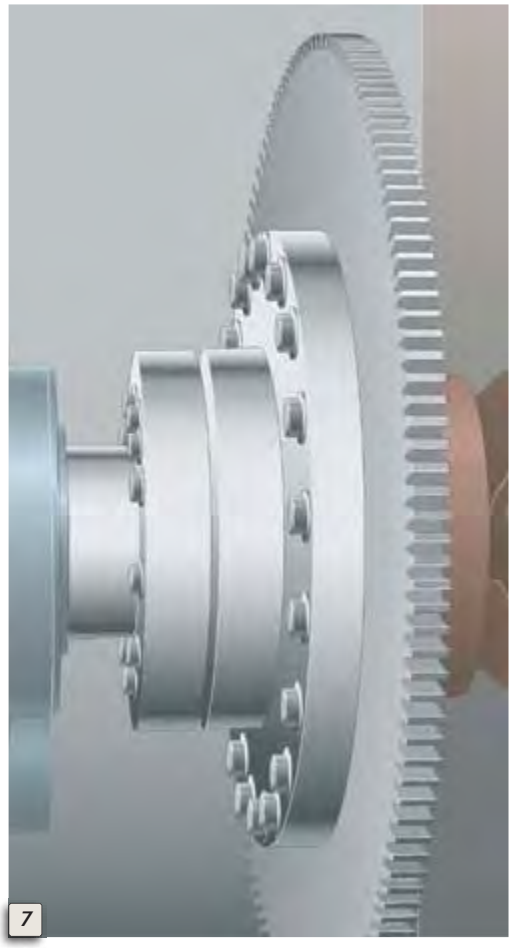

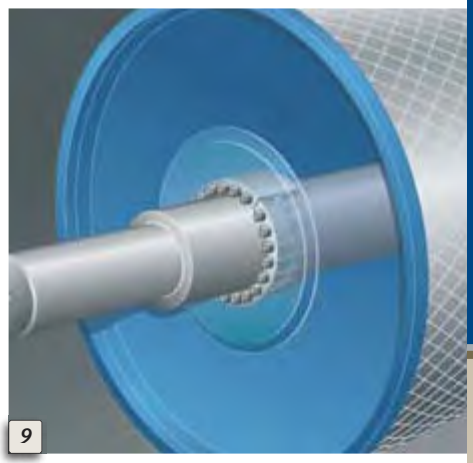

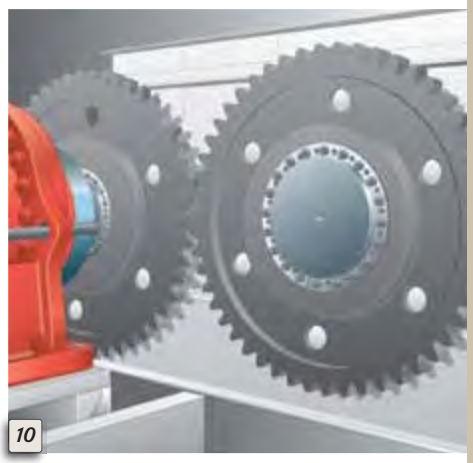

5 Heavy Duty B112 Keyless Bushings connect barking wheels and kicker arms on a log debarker.

6 B106 connects mill chain sprocket and permits simple timing of matched kicker arms on wood processing infeed table.

7 Heavy Duty Shrink Disc connects positive drive u-joint flange on coal plant pre-heater.

8 Standard Duty Shrink Disc provides zero backlash connection for flexible disc coupling on packaging equipment.

9 Medium Duty B115 integrates with modern engineered class pulley design to maximize operating life (transparent view).

10 Heavy Duty B112 used to mount and set backlash on mating gears driving low speed, high torque augers on a large volume mixer/ dryer.

Application Illustrations by Mick Hill

Made to Order (MTO)

Fenner Drives offers a wide selection of standard keyless locking devices to meet most shaft/component mounting needs. However, we realize that to be innovative in a global marketplace, today's engineers often require custom solutions. With unrivaled engineering expertise in keyless locking device design and material selection coupled with world class manufacturing capabilities, Fenner Drives is well positioned to offer MTO Keyless Locking Devices. From the ordinary to the extraordinary, our engineering team is ready to work with you. Together, we will develop a unique keyless locking device to meet your most demanding shaft/component mounting challenges.

Following are examples of some MTO building blocks that Fenner Drives has experience designing and working with. If you have an even more complex application, Fenner Drives New Product Development Group is ready to innovate with you.

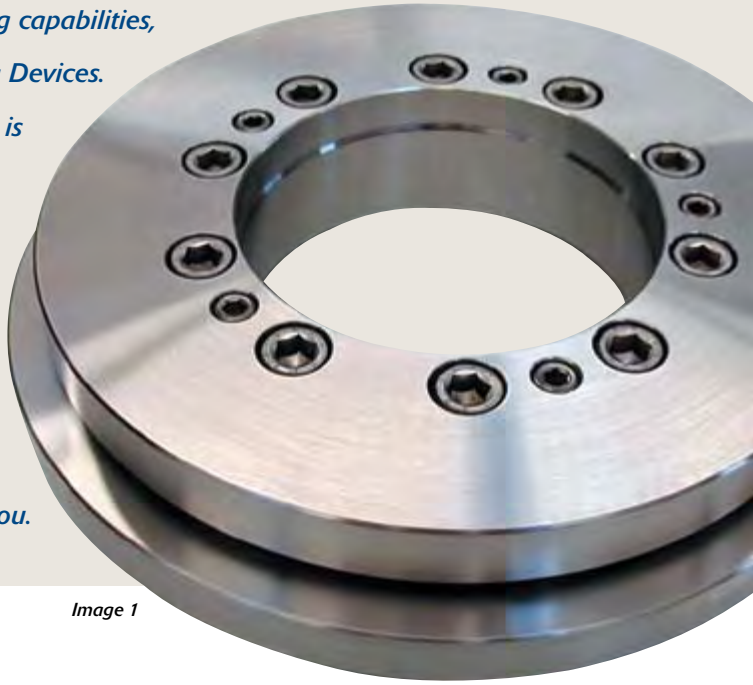

Image 1





Image 2



Image 3



Image 4

Special Materials

All standard keyless locking devices, with the exception of stainless steel, are made from either carbon or alloy steels. Certain applications may require the use of other materials such as:

- EXP stainless steel (allows for higher torque transmission without the use of lubricants)
- Brass
- Tool steel

Finishes

Special platings or coatings may be appropriate to deal with specific environmental or performance needs.

- Electroless (chemical) Nickel with PTFE
- Thin Dense Chrome (TDC)
- Zinc and aluminum in an inorganic binder (water-based, VOC compliant)

Image 1: *This MTO Half Shrink Disc was designed with recessed installation and removal screws and is fabricated entirely of Stainless Steel.*

Image 2: *This Trantorque® MTO was designed for a blood centrifuge that required daily disassembly for cleaning and disinfecting. The knob allows easy disassembly without the use of tools.*

Image 3: *This Trantorque MTO incorporates the taper of the mounted component for a custom fit.*

Image 4: *Shown actual size, this Trantorque MTO incorporates an extremely narrow clamping section that precisely matches the mounted component.*









Image 5

Lubricants

The use of lubricants on threads and in some special cases, tapers, can have dramatic impact on keyless locking device properties.

- Light machine oil
- Synthetic grease
- Food grade grease

Screws

Performance of many B-LOC® Keyless Locking Devices is determined by the screw grade used. Additionally, particular applications may benefit from a custom screw configuration.

- 12.9 and 10.9 socket head cap screws
- 10.9 hex head cap screws
- Screw count
- Screw size

Designs

In addition to special materials, finishes, lubricants and fasteners that can be used with existing designs, the Trantorque® and B-LOC fundamental architecture can be radically modified for special applications.

- Hand knobs in place of hex nuts on Trantorque Keyless Bushings
- Keyless locking devices integrated into customer components
- Lips/flanges
- Grooves
- Common OD with differing ID series
- Non-standard IDs and ODs
- Long units
- Short units



Image 6



Image 7

Image 5: *A Series of Trantorque OE MTOs designed to mount common hubs to different shaft diameters.*

Image 6: *A positioning flange is machined both inside the bore and at the back of the outer clamping ring on this Trantorque MTO. The flanges guarantee perfect positioning when components are manipulated in the field.*

Image 7: *Our Applications Engineers' penetrating knowledge of keyless bushing technology allows them to design MTO products to uniquely satisfy customer demands.*

To facilitate working with our Applications Engineering Group on MTOs, please complete the Application Data Worksheet on page 55.

SURFACE FINISH

Recommended surface finish for shafts and hub bores to be used with Fenner Drives Keyless Bushings is between 32 and 125 micro-inch (0.8 and 3.2 micro-meter) RMS. A smoother finish — such as that found on components supplied TG&P (turned, ground and polished) — is NOT recommended and can result in a failure of the connection. Note that surface finishes below 32 micro-inch (0.8 micro-meter) RMS can be roughened using longitudinal abrasion with a bastard file, emery paper or similar to achieve a surface finish within the recommended range.

CONCENTRICITY

Fenner Drives Keyless Bushings are precision machined to maximize concentricity and minimize runout. The final installed concentricity of mounted components depends on several variables, including the components themselves and the installation technique employed. Special attention to proper installation will be required for B-LOC® B400 series units. Overall, however, concentricity is typically excellent for the majority of Fenner Drives Keyless Bushings.

POLYMERIC DRIVE COMPONENTS

Fenner Drives Keyless Locking Devices are only recommended for use with drive components constructed of polymers if a metal sleeve of sufficient size and strength is incorporated into the bore of the mounted component. For design and manufacturing support of a suitable sleeve consult with a Fenner Drives Applications Engineer.

TEMPERATURE INFLUENCE

Similar to conventional shrink or press fits, connections using Fenner Drives Keyless Bushings are generally not affected by temperature changes as long as the shaft, hub and bushing are made of the same material and temperatures are applied uniformly to each. For situations where one or more of the components are made of a material with a different coefficient of thermal expansion or where thermal gradients/cycles are present, fit pressures can be impacted. Please consult a Fenner Drives Applications Engineer.

MOUNTING BEARINGS WITH FENNER DRIVES KEYLESS BUSHINGS

Mounting bearings with a Fenner Drives Keyless Bushing is not recommended. The expansion forces generated will distort the bearing's inner race, causing premature failure.

INSTALLING MULTIPLE FENNER DRIVES KEYLESS BUSHINGS IN SERIES

Additional torque capacity can be achieved by arranging two or more B-LOC Keyless Bushings in series. In these situations, where access to locking screws is available from one side only, the total torque capacity of the connection is not a linear function of the number of units applied. For applications involving B-LOC Keyless Bushings in series, please consult with a Fenner Drives Applications Engineer.

ANAEROBIC ADHESIVES (THREADLOCKER)

Do not use anaerobic adhesives such as Loctite®, Permatex® or similar compounds with Fenner Drives Keyless Bushings. Doing so results in unknown contact pressures and capacities. Further, disassembly may be compromised when such compounds are applied to the keyless bushing, the shaft and/or the hub bore. Proper installation assures sufficient pre-load so that threads are self-locking, even in cases where the keyless bushing is subjected to extreme vibratory conditions.

HOLLOW SHAFTS

Hollow shafts with bores exceeding 35% of outside diameter usually require a reduction of contact pressures in order to avoid permanent shaft deformation. Special considerations arise when installing Fenner Drives Keyless Bushings onto hollow shafts. Please consult with a Fenner Drives Applications Engineer for a trouble free hollow shaft connection.

LUBRICANTS

Trantorque® and B-LOC Keyless Locking Devices are supplied with an oil specific to the product line. The listed performance data requires the use of these lubricants to provide the necessary coefficient of friction to the sliding surfaces. Some products have strategically applied grease or oil (in some cases food grade) to achieve performance.

MATERIALS

Trantorque and B-LOC Keyless Locking Devices are made from carbon and heat treated alloy steels. B-LOC Keyless Bushings are manufactured from heat treated carbon and alloy steels. For applications in corrosive environments, corrosion resistance can be improved through sealing with grease or silicone, the use of protective cover plates, application of industry standard plating materials (e.g., nickel, thin dense chrome, etc.) or by specifying the product in stainless steel or other corrosion resistant materials. Please consult with a Fenner Drives Applications Engineer for more details.

TORQUE

T = peak drive torque = nominal torque multiplied by a variable safety factor to account for stall or start-up conditions, mass accelerations, impact loads, etc. Nominal drive torque can be calculated as follows:

$$M_{t_{nom}}\ (\text{ft lb}) = \frac{5252 \times HP}{rpm}$$

$$M_{t_{nom}}\ (\text{Nm}) = \frac{9550 \times kW}{rpm}$$

Consult with a Fenner Drives Applications Engineer in cases where "T" is uncertain.

M_t = The rated torque capacity of one Fenner Drives Keyless Bushing installed according to our instructions. Published torque capacities are calculated without using a safety factor and should be considered as the point where a connection could slip if a higher torque is applied. Therefore, always select a unit where $M_t \geq T$.

MODIFIED INSTALLATION TORQUE

Torque capacity and contact pressures are a linear function of locking screw/hex nut tightening torque (M_a) and can be adjusted if necessary by changing M_a within the following limits:

Series	M_a
Trantorque	up to 20% lower
B-LOC B103/B106/B109	up to 20% lower
B-LOC B400	up to 20% higher or up to 20% lower
B-LOC B800	up to 20% lower
B-LOC B112/B113	up to 40% lower
B-LOC B115	up to 30% lower
B-LOC B117	up to 20% lower

THRUST

T_h = transmissible thrust, determined by using the following equation:

$$T_h = \frac{2 \times M_t}{d}$$

where: d = shaft diameter
M_t = rated torque capacity

TORQUE AND THRUST COMBINED

Simultaneous transmission of torque and thrust requires calculating a resultant torque:

$$M_{t_{res}} = \sqrt{T^2 + \left(\frac{F \times d}{2}\right)^2}$$

where: T = peak drive torque
F = peak thrust load
d = shaft diameter

Select a unit where $M_t \geq M_{t_{res}}$

BENDING MOMENTS

Bending moments are a crucial sizing factor in applications where a radial load from chain pull, the weight of components, etc. acts significantly outside the keyless bushing centerline. Typical applications include rolls or conveyor pulleys where shaft deflection due to radial loads results in a bending moment between shaft and end disc. Generally, bending moments change from a positive to a negative value during each rotation and are designated as rotating or reversing bending moments.

Fenner Drives Keyless Bushings are well suited to transmit rotating/reversing bending moments. Compiled using relevant data gleaned from numerous successful heavy-duty applications in conveyor pulleys as well as pertinent investigations by independent institutions, the following bending moment capacities apply:

Series	Bending Moment Capacity (M_b)
Trantorque	0.28 × M_t
B-LOC B103/B106/B109	0.28 × M_t
B-LOC B400	0.22 × M_t
B-LOC B800	0.28 × M_t
B-LOC B115	0.32 × M_t
B-LOC B112/B113	0.35 × M_t
B-LOC B117	0.65 × M_t

where: M_t = rated torque capacity (from specification tables)

Consult with a Fenner Drives Applications Engineer on applications where the actual bending moment exceeds these recommended limits.

TORQUE AND BENDING COMBINED

Simultaneous transmission of torque and bending requires calculating a resultant torque:

$$M_{t_b} = \sqrt{T^2 + (2 \times M_b)^2}$$

where: T = peak drive torque
M_b = bending moment

Always select a unit where $M_t \geq M_{t_b}$ and M_b is within the limits appearing under Bending Moment Capacity above.

FENNER DRIVES KEYLESS BUSHINGS WITH SHAFT ADAPTOR SLEEVES

When an existing shaft diameter does not fit the bore of a standard Fenner Drives Keyless Bushing, we recommend using an adapter sleeve that can be sized to allow for the use of a standard unit and the existing shaft. The maximum wall thickness of the adapter sleeve should be approximately 10% of the existing shaft diameter.



Note that in order to maximize the torque capacity of a sleeved keyless bushing connection, the shaft/sleeve bore interface must be free of any lubricant. This makes the sleeve outside diameter/keyless bushing bore the point of lowest torque capacity (provided the sleeve outside diameter is less than 1.25 times the shaft diameter) and allows for full use of the larger keyless bushing's higher torque capacity.

Notes:

1. Sleeve ID = d_s -0/+.001" (.025mm) where d_s = shaft diameter
2. Sleeve OD = d +0/-T_L for keyless bushing to be used
3. Install dry (cleaned with non-petroleum-based solvent) at shaft/sleeve bore interface for coefficient of friction $\mu = 0.15$
4. Torque capacity at sleeve OD = M_t for keyless bushing to be used
5. Torque capacity on shaft = $M_t \times \frac{d_s}{d} \times 1.25$
6. Sleeve to be manufactured with one lengthwise slit (after machining) and from material equal to or better than shaft material
7. Sleeve can be installed over existing keyway; position slit approximately opposite keyway

RADIAL LOADS

Radial loads are generated when force is applied perpendicular to the centerline of the shaft and are frequently associated with pin or axle connections (see illustration below). Fenner Drives Keyless Bushings are well suited to provide tight, backlash-free connections for this type of application, as explained below.

F_{rad} = radial load capacity = d × L × P_s

where: d = shaft diameter
D = hub bore
L = contact length
P_h = hub pressure
P_s = shaft contact pressure = $P_h \times \frac{D}{d}$

Typical pressure distribution in backlash-free pin connections

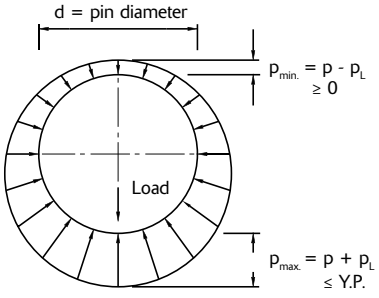

Explanations:
p = contact pressure provided by keyless bushing
p_L = contact pressure on projected contact area

$$= \frac{\text{load}}{\text{d x contact length}}$$

Y.P. = yield point of pin material

HUB SIZING

Fenner Drives Keyless Bushings transmit torque and other loads by means of mechanical interference generated by pressure exerted on both the shaft and mounted component hub. Therefore, consideration must be given to the amount of hub material (wall thickness) required to prevent permanent expansion (i.e., yielding). The following information is provided to assist you in determining the required hub diameter D_N for any keyless bushing application.

Following standard industry practice, the criterion $\sigma_{ti} < S_y$ is used to determine D_N as follows:

$$D_N = D \sqrt{\frac{S_y + (P_h \times C)}{S_y - (P_h \times C)}}$$

where: D = hub bore diameter (from product specifications)

P_h = contact pressure applied to hub bore (from product specifications)

S_y = yield strength of hub material and

C = Stress Reduction Factor which assumes the value of 1.0, 0.8 or 0.6 depending upon the relationship of your actual hub width H_w to the contact length L of the keyless bushing selected. Use the illustrations on the right to determine C for your application.

Trantorque®, B-LOC® B109, B103, B106, B117, B400 & B800	*B-LOC® B112, B113, & B115*
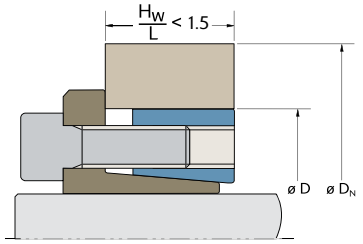 C = 1.0	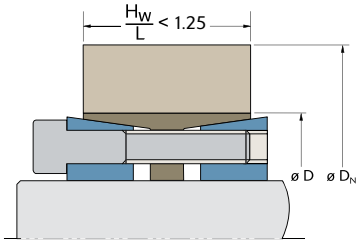 C = 1.0
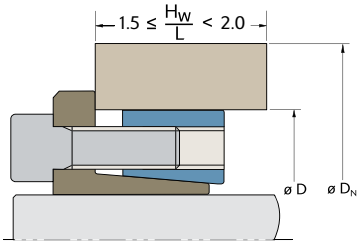 C = 0.8	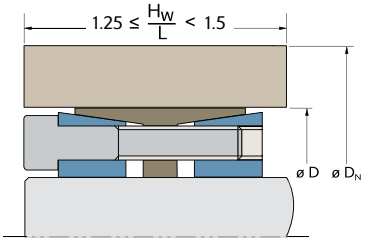 C = 0.8
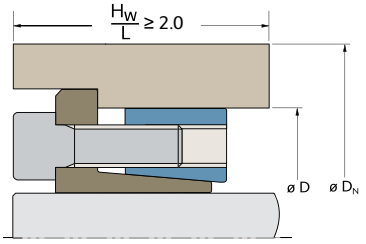 C = 0.6	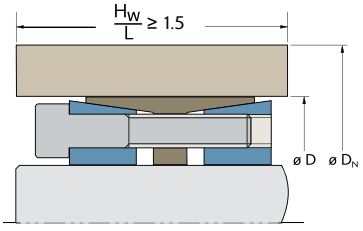 C = 0.6

Table 1
Note: Keyless Locking Device outer ring axial position must be roughly centered in the hub.

THICK WALLED CYLINDER SUBJECTED TO INTERNAL PRESSURE

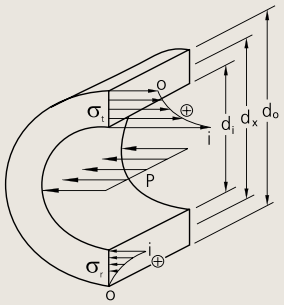

TANGENTIAL STRESSES "σ_t"

$$\sigma_{tx} = P \frac{Q}{1-Q}\left[1+\frac{d_o^2}{d_x^2}\right]$$

$$\sigma_{ti} = P \frac{1+Q}{1-Q}$$

$$\sigma_{to} = 2P \frac{Q}{1-Q}$$

RADIAL STRESSES "σ_r"

$$\sigma_{rx} = P \frac{Q}{1-Q}\left[1-\frac{d_o^2}{d_x^2}\right]$$

$$\sigma_{ri} = -P$$

$$\sigma_{ro} = 0$$

EXPANSION/ CONTRACTION

$$\Delta d_i = \frac{P d_i}{E}\left[\frac{(1+Q)}{(1-Q)} + \nu\right]$$

$$\Delta d_o = 2P \frac{d_o Q}{E(1-Q)}$$

THICK WALLED CYLINDER SUBJECTED TO EXTERNAL PRESSURE

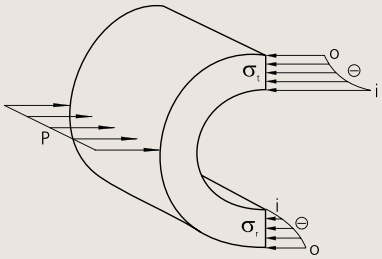

TANGENTIAL STRESSES "σ_t"

$$\sigma_{tx} = -\frac{P}{1-Q}\left[1+\frac{d_i^2}{d_x^2}\right]$$

$$\sigma_{ti} = -\frac{2P}{1-Q}$$

$$\sigma_{to} = -P \frac{1+Q}{1-Q}$$

RADIAL STRESSES "σ_r"

$$\sigma_{rx} = -\frac{P}{1-Q}\left[1-\frac{d_i^2}{d_x^2}\right]$$

$$\sigma_{ri} = 0$$

$$\sigma_{ro} = -P$$

EXPANSION/ CONTRACTION

$$\Delta d_i = 2P \frac{d_i}{E(1-Q)}$$

$$\Delta d_o = \frac{P d_o}{E}\left[\frac{(1+Q)}{(1-Q)} - \nu\right]$$

COMBINED HUB STRESSES $\sigma_v = \sqrt{\sigma_t^2 + \sigma_r^2 - (\sigma_t \sigma_r) + 3\tau^2}$

KEY
i = inside of cylinder
o = outside of cylinder
ν = Poisson's ratio for steel: 0.29
E = modulus of elasticity for steel: 3.0×10^7 psi (2.07×10^5 N/mm²)
P = pressure
τ = torsional hub stress

$$Q = \left(\frac{d_i}{d_o}\right)^2$$

Example for calculating minimum hub diameter:

Trantorque OE 1", assuming a 2" wide hub made of 55,000 psi yield strength material.

Locate part number 6410100 on page 24.
Record the values for outside diameter D, contact length L, and hub pressure P_h and return to this page.

D = 1½"
L = 1"
P_h = 18,746 psi

Determine the Stress Reduction Factor C, by first calculating the ratio of hub width to contact length (H_w/L). Next, locate the appropriate product line in Table 1 on previous page to determine C.

NOTE: Contact Fenner Drives Applications Engineering if $\frac{H_w}{L} < 1$

$\frac{H_w}{L} = 2 \longrightarrow C = 0.6$

The last item required is the yield strength of your mounted component, S_y. This value should be obtainable from the manufacturer of the mounted component or raw material supplier. For this example, the yield strength is 55,000 psi.

Substitute the values obtained above into the minimum hub diameter equation, D_N to obtain your result.

$$D_N = 1.5 \sqrt{\frac{55{,}000 + (18{,}746 \times 0.6)}{55{,}000 - (18{,}746 \times 0.6)}} = 1.846"$$

Worksheet for calculating minimum hub diameter:

	Above Example	*Your Example*
Series	Trantorque OE	
Part Number	6410400	
Size	1"	
Outside diameter, D	1.5	
Contact Length, L	1	
Hub Pressure, P_h	18,746	
Hub Size, H_w	2"	
Yield Strength, S_y	55,000 psi	

$\frac{H_w}{L} = \frac{2}{1} = 2 \longrightarrow C = 0.6$

C is obtained from Table 1 on page 16 for Trantorque where $\frac{H_w}{L} \geq 2$

$\frac{H_w}{L} = \frac{\quad}{\quad} = \quad \longrightarrow C = \quad$

$$D_N = D \sqrt{\frac{S_y + (P_h \times C)}{S_y - (P_h \times C)}}$$

$$= 1.5 \sqrt{\frac{55{,}000 + (18{,}746 \times 0.6)}{55{,}000 - (18{,}746 \times 0.6)}} = 1.846"$$

$$D_N = D \sqrt{\frac{S_y + (P_h \times C)}{S_y - (P_h \times C)}}$$

$$= \quad \sqrt{\frac{\quad + (\quad \times \quad)}{\quad - (\quad \times \quad)}} = \quad$$

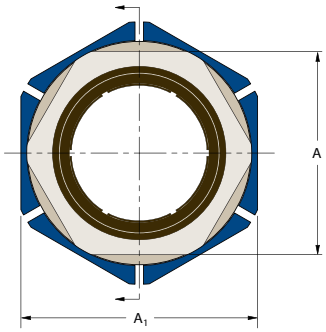

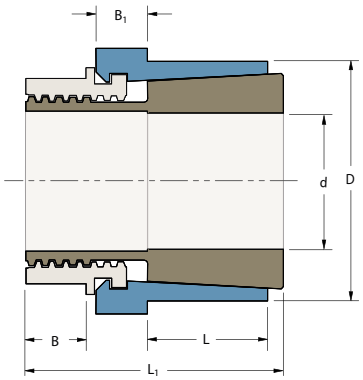

TOLERANCE (T_L)

T_L for shaft and bore is ± .003" for all sizes

Trantorque GT Inch

US Patent 5,695,297; 6,361,243

Part Number								Wrench Size				M_a	
Steel	Electroless Nickel Plated Steel	Thin Dense Chrome Coated Steel	Stainless Steel	d (inch)	D (inch)	L (inch)	L_1 (inch)	A (inch)	A_1 (inch)	B (inch)	B_1 (inch)	Install Torque (ft lb)	Shipping Weight (lb)
6202120UP	6202120EN	6202120DC	6990120	5/8	1 1/2	3/4	1 1/2	1 1/4	1 1/2	5/16	5/16	100	0.5
6202140UP	6202140EN	6202140DC	6990140	11/16	1 1/2	3/4	1 1/2	1 1/4	1 1/2	5/16	5/16	100	0.5
6202160UP	6202160EN	6202160DC	6990160	3/4	1 1/2	3/4	1 1/2	1 1/4	1 1/2	5/16	5/16	100	0.5
6202190UP	6202190EN	6202190DC	6990190	13/16	1 3/4	7/8	1 7/8	1 1/2	1 3/4	7/16	3/8	125	0.7
6202200UP	6202200EN	6202200DC	6990200	7/8	1 3/4	7/8	1 7/8	1 1/2	1 3/4	7/16	3/8	125	0.7
6202220UP	6202220EN	6202220DC	6990220	15/16	1 3/4	7/8	1 7/8	1 1/2	1 3/4	7/16	3/8	125	0.7
6202240UP	6202240EN	6202240DC	6990240	1	1 3/4	7/8	1 7/8	1 1/2	1 3/4	7/16	3/8	125	0.7
6202270UP	6202270EN	6202270DC	6990270	1 1/16	2	1	2 1/4	1 3/4	2	1/2	9/16	167	1.1
6202280UP	6202280EN	6202280DC	6990280	1 1/8	2	1	2 1/4	1 3/4	2	1/2	9/16	167	1.1
6202300UP	6202300EN	6202300DC	6990300	1 3/16	2	1	2 1/4	1 3/4	2	1/2	9/16	167	1.1
6202320UP	6202320EN	6202320DC	6990320	1 1/4	2	1	2 1/4	1 3/4	2	1/2	9/16	167	1.1
6202350UP	6202350EN	6202350DC	6990350	1 5/16	2 3/8	1 1/2	2 3/4	2	2 3/8	9/16	1/2	192	1.1
6202360UP	6202360EN	6202360DC	6990360	1 3/8	2 3/8	1 1/2	2 3/4	2	2 3/8	9/16	1/2	192	1.9
6202380UP	6202380EN	6202380DC	6990380	1 7/16	2 3/8	1 1/2	2 3/4	2	2 3/8	9/16	1/2	192	1.8
6202400UP	6202400EN	6202400DC	6990400	1 1/2	2 3/8	1 1/2	2 3/4	2	2 3/8	9/16	1/2	192	1.8
6202430UP	6202430EN	6202430DC	6990430	1 9/16	2 5/8	1 11/16	3 1/8	2 1/4	2 5/8	9/16	11/16	234	2.5
6202440UP	6202440EN	6202440DC	6990440	1 5/8	2 5/8	1 11/16	3 1/8	2 1/4	2 5/8	9/16	11/16	234	2.4
6202460UP	6202460EN	6202460DC	6990460	1 11/16	2 5/8	1 11/16	3 1/8	2 1/4	2 5/8	9/16	11/16	234	2.4
6202480UP	6202480EN	6202480DC	6990480	1 3/4	2 5/8	1 11/16	3 1/8	2 1/4	2 5/8	9/16	11/16	234	2.3
6202510UP	6202510EN	6202510DC	6990510	1 13/16	2 7/8	2	3 9/16	2 1/2	2 7/8	5/8	3/4	409	3.5
6202520UP	6202520EN	6202520DC	6990520	1 7/8	2 7/8	2	3 9/16	2 1/2	2 7/8	5/8	3/4	409	3.4
6202540UP	6202540EN	6202540DC	6990540	1 15/16	2 7/8	2	3 9/16	2 1/2	2 7/8	5/8	3/4	409	3.3
6202560UP	6202560EN	6202560DC	6990560	2	2 7/8	2	3 9/16	2 1/2	2 7/8	5/8	3/4	409	3.2
6202562UP	6202562EN	6202562DC	6990562	2 1/16	3 1/8	2 1/8	3 3/4	2 3/4	3 1/8	5/8	13/16	442	3.8
6202564UP	6202564EN	6202564DC	6990564	2 1/8	3 1/8	2 1/8	3 3/4	2 3/4	3 1/8	5/8	13/16	442	4
6202566UP	6202566EN	6202566DC	6990566	2 3/16	3 1/8	2 1/8	3 3/4	2 3/4	3 1/8	5/8	13/16	442	3.8
6202568UP	6202568EN	6202568DC	6990568	2 1/4	3 1/8	2 1/8	3 3/4	2 3/4	3 1/8	5/8	13/16	442	3.7
6202570UP	6202570EN	6202570DC	6990570	2 5/16	3 3/8	2 1/4	3 7/8	3	3 3/8	11/16	3/4	467	4.4
6202572UP	6202572EN	6202572DC	6990572	2 3/8	3 3/8	2 1/4	3 7/8	3	3 3/8	11/16	3/4	467	4.5
6202574UP	6202574EN	6202574DC	6990574	2 7/16	3 3/8	2 1/4	3 7/8	3	3 3/8	11/16	3/4	467	4.4
6202576UP	6202576EN	6202576DC	6990576	2 1/2	3 3/8	2 1/4	3 7/8	3	3 3/8	11/16	3/4	467	4.2
6202580UP	6202580EN	6202580DC	6990580	2 9/16	3 5/8	2 3/8	4 1/16	3 1/4	3 5/8	11/16	13/16	500	5
6202582UP	6202582EN	6202582DC	6990582	2 5/8	3 5/8	2 3/8	4 1/16	3 1/4	3 5/8	11/16	13/16	500	5.1
6202584UP	6202584EN	6202584DC	6990584	2 11/16	3 5/8	2 3/8	4 1/16	3 1/4	3 5/8	11/16	13/16	500	5
6202586UP	6202586EN	6202586DC	6990586	2 3/4	3 5/8	2 3/8	4 1/16	3 1/4	3 5/8	11/16	13/16	500	5
6202590UP	6202590EN	6202590DC	6990590	2 13/16	3 7/8	2 1/2	4 1/4	3 1/2	3 7/8	3/4	13/16	550	6
6202592UP	6202592EN	6202592DC	6990592	2 7/8	3 7/8	2 1/2	4 1/4	3 1/2	3 7/8	3/4	13/16	550	6
6202594UP	6202594EN	6202594DC	6990594	2 15/16	3 7/8	2 1/2	4 1/4	3 1/2	3 7/8	3/4	13/16	550	6
6202596UP	6202596EN	6202596DC	6990596	3	3 7/8	2 1/2	4 1/4	3 1/2	3 7/8	3/4	13/16	550	5



Performance Data Table

d (inch)	M_t Maximum Transmitted Torque (ft lb)	Th Maximum Transmitted Thrust (lbs)	P_h* Hub Pressure (psi)
5/8	153	5857	13347
11/16	168	5857	13347
3/4	183	5857	13347
13/16	207	6110	9336
7/8	223	6110	9336
15/16	239	6110	9336
1	255	6110	9336
1 1/16	311	7014	8313
1 1/8	329	7014	8313
1 3/16	347	7014	8313
1 1/4	365	7014	8313
1 5/16	384	7019	4842
1 3/8	402	7019	4842
1 7/16	421	7019	4842
1 1/2	439	7019	4842
1 9/16	499	7663	4287
1 5/8	519	7663	4287
1 11/16	539	7663	4287
1 3/4	559	7663	4287
1 13/16	913	12085	5257
1 7/8	944	12085	5257
1 15/16	976	12085	5257
2	1007	12085	5257
2 1/16	1013	11793	4457
2 1/8	1044	11793	4457
2 3/16	1075	11793	4457
2 1/4	1106	11793	4457
2 5/16	1101	11430	3789
2 3/8	1131	11430	3789
2 7/16	1161	11430	3789
2 1/2	1191	11430	3789
2 9/16	1207	11306	3313
2 5/8	1237	11306	3313
2 11/16	1266	11306	3313
2 3/4	1295	11306	3313
2 13/16	1354	11555	3014
2 7/8	1384	11555	3014
2 15/16	1414	11555	3014
3	1444	11555	3014

MULTIPLIERS

Steel	1.0
Electroless Nickel Plated Steel	0.6
Thin Dense Chrome Coated Steel	1.1
Stainless Steel	0.3

The data in the Performance Data Table is for a steel unit. To obtain data for other materials, use the multiplier provided.

For example, you require a 2" (d) Electroless Nickel Plated Trantorque GT.

Find 2" (d) in Performance Data Table and use the multiplier of 0.6 for Electroless Nickel Plated Steel.

M_t: 1007 x 0.6 = 604
Th: 12085 x 0.6 = 7251
*P_h: 5257 x 0.6 = 3154

***IMPORTANT:**
After hub pressure (P_h) is determined, record D, L and P_h and refer to page 16 to calculate the minimum hub diameter.

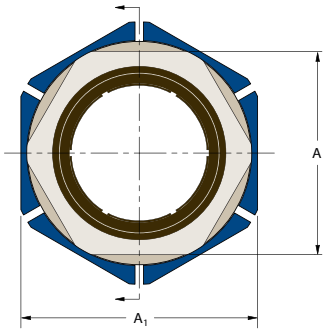

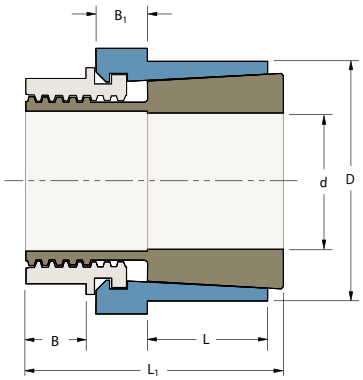

TOLERANCE (T_L)

T_L for shaft and bore is ± .08mm for all sizes

Trantorque GT Metric

US Patent 5,695,297; 6,361,243

Part Number				d (mm)	D (mm)	L (mm)	L_1 (mm)	Wrench Size		B (mm)	B_1 (mm)	M_a	Shipping Weight (kg)
Steel	Electroless Nickel Plated Steel	Thin Dense Chrome Coated Steel	Stainless Steel					A (mm)	A_1 (inch)			Install Torque (Nm)	
6202800UP	6202800EN	6202800DC	6990800	15	38.0	19.1	38.1	32	1 1/2	8.0	8.9	136	0.2
6202803UP	6202803EN	6202803DC	6990803	16	38.0	19.1	38.1	32	1 1/2	8.0	8.9	136	0.2
6202804UP	6202804EN	6202804DC	6990804	17	38.0	19.1	38.1	32	1 1/2	8.0	8.9	136	0.2
6202805UP	6202805EN	6202805DC	6990805	18	38.0	19.1	38.1	32	1 1/2	8.0	8.9	136	0.2
6202808UP	6202808EN	6202808DC	6990808	19	38.0	19.1	38.1	32	1 1/2	8.0	8.9	136	0.2
6202811UP	6202811EN	6202811DC	6990811	20	45.0	22.2	47.6	38	1 3/4	11.1	9.5	170	0.4
6202815UP	6202815EN	6202815DC	6990815	22	45.0	22.2	47.6	38	1 3/4	11.1	9.5	170	0.4
6202820UP	6202820EN	6202820DC	6990820	24	45.0	22.2	47.6	38	1 3/4	11.1	9.5	170	0.3
6202825UP	6202825EN	6202825DC	6990825	25	45.0	22.2	47.6	38	1 3/4	11.1	9.5	170	0.3
6202830UP	6202830EN	6202830DC	6990830	28	51.0	25.4	57.2	46	2	12.7	14.3	225	0.5
6202835UP	6202835EN	6202835DC	6990835	30	51.0	25.4	57.2	46	2	12.7	14.3	225	0.5
6202840UP	6202840EN	6202840DC	6990840	32	51.0	25.4	57.2	46	2	12.7	14.3	225	0.5
6202845UP	6202845EN	6202845DC	6990845	34	60.5	38.1	69.9	50	2 3/8	14.3	12.7	260	0.9
6202850UP	6202850EN	6202850DC	6990850	35	60.5	38.1	69.9	50	2 3/8	14.3	12.7	260	0.9
6202855UP	6202855EN	6202855DC	6990855	36	60.5	38.1	69.9	50	2 3/8	14.3	12.7	260	0.9
6202860UP	6202860EN	6202860DC	6990860	38	60.5	38.1	69.9	50	2 3/8	14.3	12.7	260	0.8
6202865UP	6202865EN	6202865DC	6990865	40	67.0	42.9	79.4	60	2 5/8	14.3	17.4	316	1.2
6202870UP	6202870EN	6202870DC	6990870	42	67.0	42.9	79.4	60	2 5/8	14.3	17.4	316	1.1
6202876UP	6202876EN	6202876DC	6990876	45	73.0	50.8	90.5	65	2 7/8	15.9	19.1	554	1.6
6202880UP	6202880EN	6202880DC	6990880	48	73.0	50.8	90.5	65	2 7/8	15.9	19.1	554	1.6
6202885UP	6202885EN	6202885DC	6990885	50	73.0	50.8	90.5	65	2 7/8	15.9	19.1	554	1.5
6202900UP	6202900EN	6202900DC	6990900	55	80.0	54.0	95.3	70	3 1/8	15.9	20.7	600	1.8
6202910UP	6202910EN	6202910DC	6990910	60	86.0	57.2	98.4	75	3 3/8	17.5	19.1	635	2
6202920UP	6202920EN	6202920DC	6990920	65	92.0	60.3	103.2	82	3 5/8	17.5	20.7	680	2
6202930UP	6202930EN	6202930DC	6990930	70	92.0	60.3	103.2	82	3 5/8	17.5	20.7	680	2
6202940UP	6202940EN	6202940DC	6990940	75	100.0	63.5	108.0	90	3 7/8	19.1	20.7	750	3



Performance Data Table

d (mm)	M_t Maximum Transmitted Torque (Nm)	Th Maximum Transmitted Thrust (kN)	P_h* Hub Pressure (N/mm^2)
15	196	26	93
16	209	26	93
17	222	26	93
18	235	26	93
19	248	26	93
20	273	27	64
22	300	27	64
24	327	27	64
25	341	27	64
28	434	31	57
30	465	31	57
32	496	31	57
34	530	31	33
35	546	31	33
36	561	31	33
38	592	31	33
40	679	34	29
42	713	34	29
45	1208	54	36
48	1289	54	36
50	1343	54	36
55	1444	53	31
60	1530	51	26
65	1640	50	23
70	1766	50	23
75	1939	52	21

MULTIPLIERS

Steel	1.0
Electroless Nickel Plated Steel	0.6
Thin Dense Chrome Coated Steel	1.1
Stainless Steel	0.3

The data in the Performance Data Table is for a steel unit. To obtain data for other materials, use the multiplier provided.

For example, you require a 30mm (d) Electroless Nickel Plated Trantorque GT.

Find 30mm (d) in Performance Data Table and use the multiplier of 0.6 for Electroless Nickel Plated Steel.

M_t: 465 x 0.6 = 279
Th: 31 x 0.6 = 19
*P_h: 57 x 0.6 = 34

***IMPORTANT:**
After hub pressure (P_h) is determined, record D, L and P_h and refer to page 16 to calculate the minimum hub diameter.

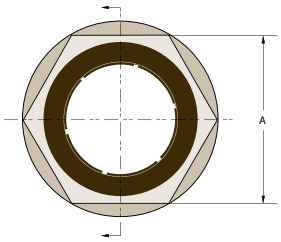

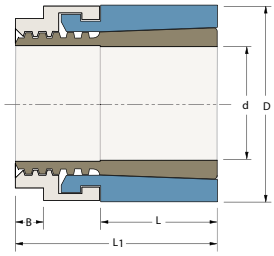

TOLERANCE (T_L)

T_L for shaft and bore is ± .0015" for all sizes

Trantorque Mini Inch

US Patent 6,361,243

Part Number				d (inch)	D (inch)	L (inch)	L_1 (inch)	Wrench Size A (inch)	B (inch)	Ma Install Torque (in lb)	Shipping Weight (lb)
Steel	Electroless Nickel Plated Steel	Thin Dense Chrome Coated Steel	Stainless Steel								
6410013	6202102EN	6410013DC	6990102	1/8	5/8	3/8	3/4	1/2	1/8	125	0.1
6410019	6202103EN	6410019DC	6990103	3/16	5/8	3/8	3/4	1/2	1/8	125	0.1
6410025	6202105EN	6410025DC	6990105	1/4	5/8	3/8	3/4	1/2	1/8	125	0.1
6410031	6202107EN	6410031DC	6990107	5/16	3/4	7/16	7/8	5/8	1/8	250	0.1
6410038	6202109EN	6410038DC	6990109	3/8	3/4	7/16	7/8	5/8	1/8	250	0.1
6410044	6202110EN	6410044DC	6990110	7/16	7/8	1/2	1	3/4	3/16	390	0.1
6410050	6202112EN	6410050DC	6990112	1/2	7/8	1/2	1	3/4	3/16	390	0.1
6410056	6202114EN	6410056DC	6990114	9/16	1	5/8	1 1/8	7/8	3/16	585	0.1
6410063	6202115EN	6410063DC	6990115	5/8	1	5/8	1 1/8	7/8	3/16	585	0.1

Performance Data Table

d (inch)	M_t Maximum Transmitted Torque (in lb)	Th Maximum Transmitted Thrust (lbs)	P_h* Hub Pressure (psi)
1/8	91	1459	16513
3/16	137	1459	16513
1/4	182	1459	16513
5/16	366	2345	18960
3/8	440	2345	18960
7/16	669	3057	18535
1/2	764	3057	18535
9/16	1110	3948	16754
5/8	1234	3948	16754

MULTIPLIERS

Steel	1.0
Electroless Nickel Plated Steel	0.8
Thin Dense Chrome Coated Steel	1.0
Stainless Steel	0.35

The data in the Performance Data Table is for a steel unit. To obtain data for other materials, use the multiplier provided.

For example, you require a 1/4" (d) Electroless Nickel Plated Trantorque Mini.

Find 1/4" (d) in Performance Data Table and use the multiplier of 0.8 for Electroless Nickel Plated Steel.

M_t: 182 x 0.8 = 146
Th: 1459 x 0.8 = 1167
*P_h: 16513 x 0.8 = 13210

***IMPORTANT:**

After hub pressure (P_h) is determined, record D, L and P_h and refer to page 16 to calculate the minimum hub diameter.



TOLERANCE (T_L)

T_L for shaft and bore is ± .04mm for all sizes

Trantorque Mini Metric

US Patent 6,361,243

Part Number				d (mm)	D (mm)	L (mm)	L_1 (mm)	Wrench Size A (mm)	B (mm)	M_a Install Torque (Nm)	Shipping Weight (kg)
Steel	Electroless Nickel Plated Steel	Thin Dense Chrome Coated Steel	Stainless Steel								
TTQM0316	TTQM0316EN	TTQM0316DC	TTQM0316SS	3	16	10	19	13	3	14	0.02
TTQM0416	TTQM0416EN	TTQM0416DC	TTQM0416SS	4	16	10	19	13	3	14	0.02
TTQM0516	TTQM0516EN	TTQM0516DC	TTQM0516SS	5	16	10	19	13	3	14	0.02
TTQM0616	TTQM0616EN	TTQM0616DC	TTQM0616SS	6	16	10	19	13	3	14	0.02
TTQM0720	TTQM0720EN	TTQM0720DC	TTQM0720SS	7	20	11	22	16	3	28	0.03
TTQM0820	TTQM0820EN	TTQM0820DC	TTQM0820SS	8	20	11	22	16	3	28	0.03
TTQM0920	TTQM0920EN	TTQM0920DC	TTQM0920SS	9	20	11	22	16	3	28	0.03
TTQM1023	TTQM1023EN	TTQM1023DC	TTQM1023SS	10	23	13	26	19	5	44	0.05
TTQM1123	TTQM1123EN	TTQM1123DC	TTQM1123SS	11	23	13	26	19	5	44	0.05
TTQM1223	TTQM1223EN	TTQM1223DC	TTQM1223SS	12	23	13	26	19	5	44	0.05
TTQM1426	TTQM1426EN	TTQM1426DC	TTQM1426SS	14	26	16	29	22	5	66	0.06
TTQM1526	TTQM1526EN	TTQM1526DC	TTQM1526SS	15	26	16	29	22	5	66	0.06
TTQM1626	TTQM1626EN	TTQM1626DC	TTQM1626SS	16	26	16	29	22	5	66	0.06

Performance Data Table

d (mm)	Maximum Transmitted Torque (M_t) (Nm)	Maximum Transmitted Thrust (Th) (kN)	Hub Pressure (P_h*) (N/mm^2)
3	10	6	112
4	13	6	112
5	16	6	112
6	19	6	112
7	36	10	123
8	41	10	123
9	47	10	123
10	68	14	123
11	75	14	123
12	81	14	123
14	123	18	113
15	132	18	113
16	140	18	113

MULTIPLIERS

Steel	1.0
Electroless Nickel Plated Steel	0.8
Thin Dense Chrome Coated Steel	1.0
Stainless Steel	0.35

The data in the Performance Data Table is for a steel unit. To obtain data for other materials, use the multiplier provided.

For example, you require a 8mm (d) Electroless Nickel Plated Trantorque Mini.

Find 8mm (d) in Performance Data Table and use the multiplier of 0.8 for Electroless Nickel Plated Steel.

M_t: 41 x 0.8 = 33
Th: 10 x 0.8 = 8
*P_h: 123 x 0.8 = 98

***IMPORTANT:**

After hub pressure (P_h) is determined, record D, L and P_h and refer to page 16 to calculate the minimum hub diameter.

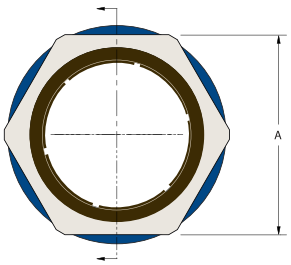

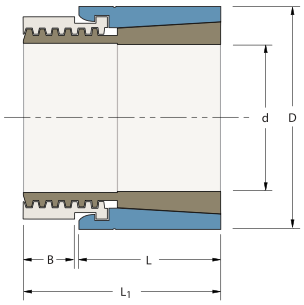

TOLERANCE (T_L)

T_L for shaft and bore is ± .003" for all sizes

Trantorque OE Inch

US Patent 5,695,297; 6,361,243

Part Number				d (inch)	D (inch)	L (inch)	L_1 (inch)	Wrench Size	B (inch)	M_a	Shipping Weight (lb)
Steel	Electroless Nickel Plated Steel	Thin Dense Chrome Coated Steel	Stainless Steel					A (inch)		Install Torque (ft lb)	
6410069	6410069EN	6410069DC	6410069SS	11/16	1 1/4	7/8	1 5/32	1 1/8	1/4	82	0.2
6410075	6410075EN	6410075DC	6410075SS	3/4	1 1/4	7/8	1 5/32	1 1/8	1/4	82	0.2
6410081	6410081EN	6410081DC	6410081SS	13/16	1 3/8	15/16	1 1/4	1 1/4	1/4	111	0.2
6410088	6410088EN	6410088DC	6410088SS	7/8	1 3/8	15/16	1 1/4	1 1/4	1/4	111	0.2
6410094	6410094EN	6410094DC	6410094SS	15/16	1 1/2	1	1 11/32	1 3/8	5/16	137	0.4
6410100	6410100EN	6410100DC	6410100SS	1	1 1/2	1	1 11/32	1 3/8	5/16	137	0.3
6410106	6410106EN	6410106DC	6410106SS	1 1/16	1 5/8	1 1/16	1 15/32	1 1/2	3/8	155	0.4
6410113	6410113EN	6410113DC	6410113SS	1 1/8	1 5/8	1 1/16	1 15/32	1 1/2	3/8	155	0.4
6410119	6410119EN	6410119DC	6410119SS	1 3/16	1 3/4	1 1/8	1 19/32	1 5/8	7/16	177	0.5
6410125	6410125EN	6410125DC	6410125SS	1 1/4	1 3/4	1 1/8	1 19/32	1 5/8	7/16	177	0.5
6410131	6410131EN	6410131DC	6410131SS	1 5/16	1 7/8	1 3/16	1 11/16	1 3/4	1/2	196	0.6
6410138	6410138EN	6410138DC	6410138SS	1 3/8	1 7/8	1 3/16	1 11/16	1 3/4	1/2	196	0.6
6410144	6410144EN	6410144DC	6410144SS	1 7/16	2	1 1/4	1 25/32	1 7/8	1/2	196	0.7
6410150	6410150EN	6410150DC	6410150SS	1 1/2	2	1 1/4	1 25/32	1 7/8	1/2	196	0.6

Performance Data Table

d (inch)	M_t Maximum Transmitted Torque (ft lb)	Th Maximum Transmitted Thrust (lbs)	P_h* Hub Pressure (psi)
11/16	162	5639	20247
3/4	176	5639	20247
13/16	231	6816	20136
7/8	248	6816	20136
15/16	297	7601	18746
1	317	7601	18746
1 1/16	348	7868	16466
1 1/8	369	7868	16466
1 3/16	409	8267	14865
1 1/4	431	8267	14865
1 5/16	463	8463	13259
1 3/8	485	8463	13259
1 7/16	473	7878	10838
1 1/2	492	7878	10838

MULTIPLIERS

Steel	1.0
Electroless Nickel Plated Steel	0.6
Thin Dense Chrome Coated Steel	0.9
Stainless Steel	0.3

The data in the Performance Data Table is for a steel unit. To obtain data for other materials, use the multiplier provided.

For example, you require a 1" (d) Electroless Nickel Plated Trantorque OE.

Find 1" (d) in Performance Data Table and use the multiplier of 0.6 for Electroless Nickel Plated Steel.

M_t: 317 x 0.6 = 190
Th: 7601 x 0.6 = 4561
*P_h: 18746 x 0.6 = 11248

***IMPORTANT:**

After hub pressure (P_h) is determined, record D, L and P_h and refer to page 16 to calculate the minimum hub diameter.



TOLERANCE (T_L)

T_L for shaft and bore is ± .08mm for all sizes

Trantorque OE Metric

US Patent 5,695,297; 6,361,243

Part Number				d (mm)	D (mm)	L (mm)	L_1 (mm)	Wrench Size A (mm)	B (mm)	M_a Install Torque (Nm)	Shipping Weight (kg)
Steel	Electroless Nickel Plated Steel	Thin Dense Chrome Coated Steel	Stainless Steel								
TTQM1732	TTQM1732EN	TTQM1732DC	TTQM1732SS	17	32	22	29	30	6	110	0.1
TTQM1832	TTQM1832EN	TTQM1832DC	TTQM1832SS	18	32	22	29	30	6	110	0.1
TTQM1932	TTQM1932EN	TTQM1932DC	TTQM1932SS	19	32	22	29	30	6	110	0.1
TTQM2035	TTQM2035EN	TTQM2035DC	TTQM2035SS	20	35	24	32	32	7	150	0.1
TTQM2235	TTQM2235EN	TTQM2235DC	TTQM2235SS	22	35	24	32	32	7	150	0.1
TTQM2438	TTQM2438EN	TTQM2438DC	TTQM2438SS	24	38	25	34	36	7	185	0.2
TTQM2538	TTQM2538EN	TTQM2538DC	TTQM2538SS	25	38	25	34	36	7	185	0.2
TTQM2845	TTQM2845EN	TTQM2845DC	TTQM2845SS	28	45	29	41	46	11	240	0.3
TTQM3045	TTQM3045EN	TTQM3045DC	TTQM3045SS	30	45	29	41	46	11	240	0.3
TTQM3250	TTQM3250EN	TTQM3250DC	TTQM3250SS	32	50	30	43	50	11	265	0.4
TTQM3550	TTQM3550EN	TTQM3550DC	TTQM3550SS	35	50	30	43	50	11	265	0.3

Performance Data Table

d (mm)	M_t Maximum Transmitted Torque (Nm)	Th Maximum Transmitted Thrust (kN)	P_h* Hub Pressure (N/mm^2)
17	211	25	137
18	223	25	137
19	236	25	137
20	303	30	138
22	333	30	138
24	405	34	129
25	422	34	129
28	515	37	101
30	551	37	101
32	601	38	87
35	658	38	87

MULTIPLIERS

Steel	1.0
Electroless Nickel Plated Steel	0.6
Thin Dense Chrome Coated Steel	0.9
Stainless Steel	0.3

The data in the Performance Data Table is for a steel unit. To obtain data for other materials, use the multiplier provided.

For example, you require a 20mm (d) Electroless Nickel Plated Trantorque OE.

Find 20mm (d) in Performance Data Table and use the multiplier of 0.6 for Electroless Nickel Plated Steel.

M_t: 303 x 0.6 = 182
Th: 30 x 0.6 = 18
*P_h: 138 x 0.6 = 83

***IMPORTANT:**
After hub pressure (P_h) is determined, record D, L and P_h and refer to page 16 to calculate the minimum hub diameter.



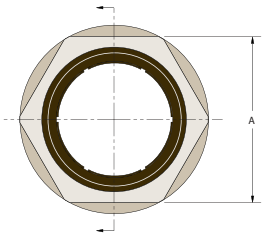

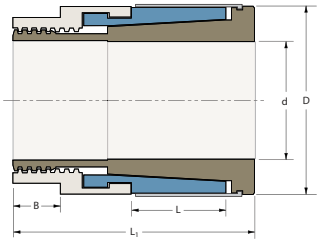

TOLERANCE (T_L)

Bore diameter machined to D ± T_L
T_L = .0015" for Part Numbers 6980103UP – 6980119UP

T_L = .003" for all other Trantorque NT

Trantorque NT Inch

US Patent 6,361,243

Part Number					Wrench Size		M_a	M_t	Th	Ph*
								Maximum Transmitted		
Steel	d (inch)	D (inch)	L (inch)	L_1 (inch)	A (inch)	B (inch)	Install Torque (in lb)	Torque (ft lb)	Thrust (lbs)	Hub Pressure (psi)
6980103UP	3/16	5/8	3/8	1 1/16	1/2	1/8	125	7	839	9496
6980105UP	1/4	5/8	3/8	1 1/16	1/2	1/8	125	9	839	9496
6980107UP	5/16	3/4	7/16	1 3/16	5/8	1/8	150	11	809	6542
6980109UP	3/8	3/4	7/16	1 3/16	5/8	1/8	150	13	809	6542
6980110UP	7/16	7/8	1/2	1 5/16	3/4	3/16	175	14	789	4783
6980112UP	1/2	7/8	1/2	1 5/16	3/4	3/16	175	16	789	4783
6980114UP	9/16	1	5/8	1 7/16	7/8	3/16	200	18	776	3294
6980115UP	5/8	1	5/8	1 7/16	7/8	3/16	200	20	776	3294
6980119UP	3/4	1 1/4	3/4	1 11/16	1 1/16	1/4	700	70	2227	6301
6980120UP	5/8	1 1/2	11/16	1 13/16	1 1/4	5/16	1200	87	3336	8580
6980140UP	11/16	1 1/2	11/16	1 13/16	1 1/4	5/16	1200	96	3336	8580
6980160UP	3/4	1 1/2	11/16	1 13/16	1 1/4	5/16	1200	104	3336	8580
6980190UP	13/16	1 3/4	13/16	2 3/16	1 1/2	7/16	1500	116	3441	6420
6980200UP	7/8	1 3/4	13/16	2 3/16	1 1/2	7/16	1500	125	3441	6420
6980220UP	15/16	1 3/4	13/16	2 3/16	1 1/2	7/16	1500	134	3441	6420
6980240UP	1	1 3/4	13/16	2 3/16	1 1/2	7/16	1500	143	3441	6420
6980270UP	1 1/16	2	15/16	2 9/16	1 3/4	1/2	2000	175	3962	5605
6980280UP	1 1/8	2	15/16	2 9/16	1 3/4	1/2	2000	186	3962	5605
6980300UP	1 3/16	2	15/16	2 9/16	1 3/4	1/2	2000	196	3962	5605
6980320UP	1 1/4	2	15/16	2 9/16	1 3/4	1/2	2000	206	3962	5605
6980350UP	1 5/16	2 3/8	1 7/16	3 3/32	2	9/16	2300	215	3939	3060
6980360UP	1 3/8	2 3/8	1 7/16	3 3/32	2	9/16	2300	226	3939	3060
6980380UP	1 7/16	2 3/8	1 7/16	3 3/32	2	9/16	2300	236	3939	3060
6980400UP	1 1/2	2 3/8	1 7/16	3 3/32	2	9/16	2300	246	3939	3060
6980430UP	1 9/16	2 5/8	1 5/8	3 15/32	2 1/4	9/16	2800	278	4277	2659
6980440UP	1 5/8	2 5/8	1 5/8	3 15/32	2 1/4	9/16	2800	290	4277	2659
6980460UP	1 11/16	2 5/8	1 5/8	3 15/32	2 1/4	9/16	2800	301	4277	2659
6980480UP	1 3/4	2 5/8	1 5/8	3 15/32	2 1/4	9/16	2800	312	4277	2659
6980510UP	1 13/16	2 7/8	1 15/16	4 3/64	2 1/2	5/8	4900	508	6730	3205
6980520UP	1 7/8	2 7/8	1 15/16	4 3/64	2 1/2	5/8	4900	526	6730	3205
6980540UP	1 15/16	2 7/8	1 15/16	4 3/64	2 1/2	5/8	4900	543	6730	3205
6980560UP	2	2 7/8	1 15/16	4 3/64	2 1/2	5/8	4900	561	6730	3205

***IMPORTANT:** Please refer to page 16 to calculate your minimum hub diameter.

Consult factory for weights and availability.



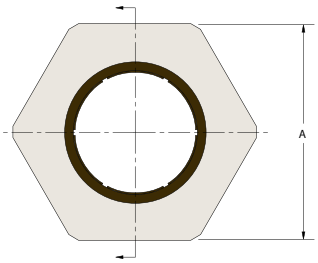

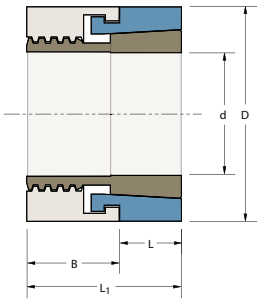

TOLERANCE (T_L)

Bore diameter machined to D ± T_L

T_L = .0015" for Part Numbers 6940103UP – 6940119UP

T_L = .003" for all other Trantorque S

Trantorque S Inch

US Patent 6,361,243

Part Number					Wrench Size		M_a	M_t	Th	P_h*
								Maximum Transmitted		
Steel	d (inch)	D (inch)	L (inch)	L_1 (inch)	A (inch)	B (inch)	Install Torque (in lb)	Torque (ft lb)	Thrust (lbs)	Hub Pressure (psi)
6940103UP	3/16	5/8	1/4	5/8	5/8	3/8	125	10	1333	22635
6940105UP	1/4	5/8	1/4	5/8	5/8	3/8	125	14	1333	22635
6940107UP	5/16	3/4	1/4	5/8	3/4	3/8	150	17	1308	18506
6940109UP	3/8	3/4	1/4	5/8	3/4	3/8	150	20	1308	18506
6940110UP	7/16	7/8	3/8	3/4	7/8	3/8	175	24	1290	10429
6940112UP	1/2	7/8	3/8	3/4	7/8	3/8	175	27	1290	10429
6940114UP	9/16	1	3/8	7/8	1	1/2	200	30	1280	9053
6940115UP	5/8	1	3/8	7/8	1	1/2	200	33	1280	9053
6940119UP	3/4	1 1/4	3/8	1	1 1/4	5/8	700	116	3707	20977
6940120UP	5/8	1 1/2	1/2	1 1/4	1 1/2	3/4	1200	151	5800	17838
6940140UP	11/16	1 1/2	1/2	1 1/4	1 1/2	3/4	1200	166	5800	17838
6940160UP	3/4	1 1/2	1/2	1 1/4	1 1/2	3/4	1200	181	5800	17838
6940190UP	13/16	1 3/4	1/2	1 1/4	1 3/4	3/4	1500	203	5984	15774
6940200UP	7/8	1 3/4	1/2	1 1/4	1 3/4	3/4	1500	218	5984	15774
6940220UP	15/16	1 3/4	1/2	1 1/4	1 3/4	3/4	1500	234	5984	15774
6940240UP	1	1 3/4	1/2	1 1/4	1 3/4	3/4	1500	249	5984	15774
6940270UP	1 1/16	2	1/2	1 1/4	2	3/4	2000	305	6889	15890
6940280UP	1 1/8	2	1/2	1 1/4	2	3/4	2000	323	6889	15890
6940300UP	1 3/16	2	1/2	1 1/4	2	3/4	2000	341	6889	15890
6940320UP	1 1/4	2	1/2	1 1/4	2	3/4	2000	359	6889	15890
6940350UP	1 5/16	2 3/8	1/2	1 1/2	2 1/4	1	2300	375	6849	13303
6940360UP	1 3/8	2 3/8	1/2	1 1/2	2 1/4	1	2300	392	6849	13303
6940380UP	1 7/16	2 3/8	1/2	1 1/2	2 1/4	1	2300	410	6849	13303
6940400UP	1 1/2	2 3/8	1/2	1 1/2	2 1/4	1	2300	428	6849	13303
6940430UP	1 9/16	2 5/8	1/2	1 1/2	2 1/2	1	2800	484	7436	13069
6940440UP	1 5/8	2 5/8	1/2	1 1/2	2 1/2	1	2800	504	7436	13069
6940460UP	1 11/16	2 5/8	1/2	1 1/2	2 1/2	1	2800	523	7436	13069
6940480UP	1 3/4	2 5/8	1/2	1 1/2	2 1/2	1	2800	542	7436	13069

***IMPORTANT:** Please refer to page 16 to calculate your minimum hub diameter.

Consult factory for weights and availability.

B-LOC
B112



Locking screws transfer to integrated push-off holes for disassembly.

Metric socket head locking screws ISO 4762 grade 12.9 (See M_a for install torque).

Screw head height = screw diameter (mm)

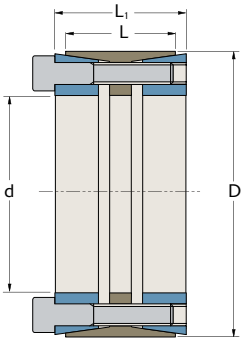

TOLERANCE (T_L)

Bore diameter machined to D -0/+T_L

T_L = .002" for bores up to 4.724"
.003" for bores up to 12.008"
.004" for bores up to 25.000"
.005" for bores over 25.000"

d = shaft diameter machined to d +0/-T_L.

B112 – Heavy Duty – Inch

Part Number	d (inch)	D (inch)	L (inch)	L_1 (inch)	Locking Screws Qty	Locking Screws Size	M_a Install Torque (ft lb)	M_t Maximum Transmitted Torque (ft lb)	Th Maximum Transmitted Thrust (lbs)	P_h Hub Pressure (psi)	Shipping Weight (lb)
B122100	1	2.165	1.260	1.575	6	M6 x 35	12	600	14390	18656	1.0
T122102	1 1/8	2.165	1.260	1.575	6	M6 x 35	12	675	14390	18656	1.0
B122103	1 3/16	2.165	1.260	1.575	6	M6 x 35	12	712	14390	18656	0.9
B122104	1 1/4	2.362	1.732	2.126	7	M6 x 45	12	874	16788	14083	1.5
B122106	1 3/8	2.362	1.732	2.126	7	M6 x 45	12	962	16788	14083	1.4
B122107	1 7/16	2.362	1.732	2.126	7	M6 x 45	12	1006	16788	14083	1.3
B122108	1 1/2	2.953	1.732	2.126	7	M8 x 50	30	2011	32182	21598	2.4
B122110	1 5/8	2.953	1.732	2.126	7	M8 x 50	30	2179	32182	21598	2.3
T122111	1 11/16	2.953	1.732	2.126	7	M8 x 50	30	2263	32182	21598	2.3
B122112	1 3/4	2.953	1.732	2.126	7	M8 x 50	30	2347	32182	21598	2.1
B122114	1 7/8	3.150	2.205	2.598	8	M8 x 55	30	2873	36779	17881	2.9
B122115	1 15/16	3.150	2.205	2.598	8	M8 x 55	30	2969	36779	17881	2.8
B122200	2	3.150	2.205	2.598	8	M8 x 55	30	3065	36779	17881	2.6
B122202	2 1/8	3.346	2.205	2.598	9	M8 x 55	30	3664	41377	18933	2.9
B122203	2 3/16	3.346	2.205	2.598	9	M8 x 55	30	3771	41377	18933	2.8
B122204	2 1/4	3.543	2.205	2.598	10	M8 x 55	30	4310	45974	19868	3.3
B122206	2 3/8	3.543	2.205	2.598	10	M8 x 55	30	4550	45974	19868	3.1
B122207	2 7/16	3.740	2.205	2.598	10	M8 x 55	30	4669	45974	18822	3.6
B122208	2 1/2	3.740	2.205	2.598	10	M8 x 55	30	4789	45974	18822	3.4
B122209	2 9/16	3.740	2.205	2.598	10	M8 x 55	30	4909	45974	18822	3.3
B122210	2 5/8	4.331	2.756	3.150	10	M10 x 60	60	8155	74561	20714	7
T122211	2 11/16	4.331	2.756	3.150	10	M10 x 60	60	8349	74561	20714	7
B122212	2 3/4	4.331	2.756	3.150	10	M10 x 60	60	8543	74561	20714	6
B122214	2 7/8	4.331	2.756	3.150	10	M10 x 60	60	8932	74561	20714	6
B122215	2 15/16	4.724	2.756	3.150	11	M10 x 60	60	10039	82017	20887	8
B122300	3	4.724	2.756	3.150	11	M10 x 60	60	10252	82017	20887	7
T122302	3 1/8	4.724	2.756	3.150	11	M10 x 60	60	10679	82017	20887	7
B122304	3 1/4	4.724	2.756	3.150	11	M10 x 60	60	11107	82017	20887	7
B122306	3 3/8	5.118	2.756	3.150	12	M10 x 60	60	12582	89474	21033	8
B122307	3 7/16	5.118	2.756	3.150	12	M10 x 60	60	12815	89474	21033	8
B122308	3 1/2	5.118	2.756	3.150	12	M10 x 60	60	13048	89474	21033	8
T122310	3 5/8	5.118	2.756	3.150	12	M10 x 60	60	13514	89474	21033	7
B122312	3 3/4	5.709	3.543	4.016	11	M12 x 80	105	19172	122699	20688	13
B122314	3 7/8	5.709	3.543	4.016	11	M12 x 80	105	19811	122699	20688	12
T122315	3 15/16	5.709	3.543	4.016	11	M12 x 80	105	20130	122699	20688	13
B122400	4	5.709	3.543	4.016	11	M12 x 80	105	20450	122699	20688	12
T122404	4 1/4	6.102	3.543	4.016	12	M12 x 80	105	23703	133853	21112	14
T122406	4 3/8	6.102	3.543	4.016	12	M12 x 80	105	24400	133853	21112	13
B122407	4 7/16	6.496	3.543	4.016	14	M12 x 80	105	28874	156162	23138	16
B122408	4 1/2	6.496	3.543	4.016	14	M12 x 80	105	29280	156162	23138	16
T122412	4 3/4	6.496	3.543	4.016	14	M12 x 80	105	30907	156162	23138	14
B122415	4 15/16	7.087	4.094	4.567	12	M14 x 90	166	37477	182167	20618	21
B122500	5	7.087	4.094	4.567	12	M14 x 90	166	37952	182167	20618	21
B122504	5 1/4	7.480	4.094	4.567	14	M14 x 90	166	46491	212528	22789	24
B122507	5 7/16	7.480	4.094	4.567	14	M14 x 90	166	48151	212528	22789	22
T122508	5 1/2	7.480	4.094	4.567	14	M14 x 90	166	48704	212528	22789	21
T122512	5 3/4	7.874	4.094	4.567	15	M14 x 90	166	54555	227709	23196	24
B122515	5 15/16	7.874	4.094	4.567	15	M14 x 90	166	56334	227709	23196	22
B122600	6	8.268	4.094	4.567	16	M14 x 90	166	60722	242890	23564	26
T122607	6 7/16	8.858	5.276	5.866	14	M16 x 110	257	77782	289982	20051	40
T122608	6 1/2	8.858	5.276	5.866	14	M16 x 110	257	78537	289982	20051	39
B122615	6 15/16	9.252	5.276	5.866	15	M16 x 110	257	89810	310695	20569	40
B122700	7	9.252	5.276	5.866	15	M16 x 110	257	90619	310695	20569	38
T122704	7 1/4	9.843	5.276	5.866	16	M16 x 110	257	100113	331408	20624	47
T122707	7 7/16	9.843	5.276	5.866	16	M16 x 110	257	102702	331408	20624	44
T122708	7 1/2	9.843	5.276	5.866	16	M16 x 110	257	103565	331408	20624	43
T122712	7 3/4	10.236	5.276	5.866	16	M16 x 110	257	107017	331408	19830	48
T122715	7 15/16	10.236	5.276	5.866	16	M16 x 110	257	109606	331408	19830	45
T122800	8	10.236	5.276	5.866	16	M16 x 110	257	110469	331408	19830	44

TOLERANCE (T_L)

Bore diameter machined to D -0/+T_L
T_L = .05mm for bores up to 120mm
.08mm for bores up to 305mm
.10mm for bores up to 635mm
.13mm for bores over 635mm

d = shaft diameter machined to d +0/-T_L.

B112 — Heavy Duty — Metric

Part Number	d (mm)	D (mm)	L (mm)	L_1 (mm)	Locking Screws		M_a	M_t	Th	P_h	Shipping Weight (kg)
							Install Torque (Nm)	Maximum Transmitted			
					Qty	Size		Torque (Nm)	Thrust (N)	Hub Pressure (N/mm^2)	
T121024	24	55	32	40	6	M6 x 35	16	755	62949	126	0.4
B121025	25	55	32	40	6	M6 x 35	16	787	62949	126	0.4
T121028	28	55	32	40	6	M6 x 35	16	881	62949	126	0.4
B121030	30	55	32	40	6	M6 x 35	16	944	62949	126	0.4
T121032	32	60	44	54	7	M6 x 45	16	1175	73440	95	0.6
B121035	35	60	44	54	7	M6 x 45	16	1285	73440	95	0.6
T121038	38	75	44	54	7	M8 x 50	41	2742	144304	150	1.0
B121040	40	75	44	54	7	M8 x 50	41	2886	144304	150	1.0
T121042	42	75	44	54	7	M8 x 50	41	3030	144304	150	1.0
B121045	45	75	44	54	7	M8 x 50	41	3247	144304	150	0.9
T121048	48	80	56	66	8	M8 x 55	41	3958	164918	124	1.3
B121050	50	80	56	66	8	M8 x 55	41	4123	164918	124	1.2
B121055	55	85	56	66	9	M8 x 55	41	5102	185533	132	1.3
B121060	60	90	56	66	10	M8 x 55	41	6184	206148	138	1.4
B121065	65	95	56	66	10	M8 x 55	41	6700	206148	131	1.5
B121070	70	110	70	80	10	M10 x 60	81	11559	330251	142	3
T121075	75	115	70	80	10	M10 x 60	81	12384	330251	136	3
B121080	80	120	70	80	11	M10 x 60	81	14531	363276	143	3
T121085	85	125	70	80	11	M10 x 60	81	15439	363276	138	3
B121090	90	130	70	80	12	M10 x 60	81	17834	396302	144	4
T121095	95	135	70	80	12	M10 x 60	81	18824	396302	139	4
B121100	100	145	90	102	11	M12 x 80	142	27222	544433	142	6
B121110	110	155	90	102	12	M12 x 80	142	32666	593927	145	6
B121120	120	165	90	102	14	M12 x 80	142	41575	692914	159	7
B121130	130	180	104	116	12	M14 x 90	225	52658	810116	142	9
B121140	140	190	104	116	14	M14 x 90	225	66159	945135	157	10
B121150	150	200	104	116	15	M14 x 90	225	75948	1012645	160	10
B121160	160	210	104	116	16	M14 x 90	225	86412	1080154	162	11
T121170	170	225	134	149	14	M16 x 110	348	109506	1288307	138	16
T121180	180	235	134	149	15	M16 x 110	348	124230	1380329	142	17
T121190	190	250	134	149	16	M16 x 110	348	139873	1472351	142	20
B121200	200	260	134	149	16	M16 x 110	348	147235	1472351	137	21
B121220	220	285	134	150	18	M16 x 110	348	182203	1656395	140	25
B121240	240	305	134	150	20	M16 x 110	348	220853	1840439	146	27
T121260	260	325	134	150	21	M16 x 110	348	251220	1932460	143	29
T121280	280	355	165	177	18	M20 x 130	678	360984	2578456	146	43
T121300	300	375	165	177	20	M20 x 130	678	429743	2864951	154	47
T121320	320	405	165	177	21	M20 x 130	678	481312	3008198	149	56
T121340	340	425	165	177	22	M20 x 130	678	535746	3151446	149	60
T121360	360	455	190	203	21	M22 x 150	915	670526	3725144	143	80
T121380	380	475	190	203	22	M22 x 150	915	741481	3902532	143	85
T121400	400	495	190	203	24	M22 x 150	915	851462	4257308	150	88
T121420	420	515	190	203	24	M22 x 150	915	894035	4257308	144	92
T121440	440	535	190	203	24	M22 x 150	915	936608	4257308	139	96
T121460	460	555	190	203	24	M22 x 150	915	979181	4257308	134	101
T121480	480	575	190	203	28	M22 x 150	915	1192046	4966859	151	103
T121500	500	595	190	203	28	M22 x 150	915	1241715	4966859	146	108
T121520	520	615	190	203	30	M22 x 150	915	1383625	5321634	151	111
T121540	540	635	190	203	30	M22 x 150	915	1436841	5321634	146	114
T121560	560	655	190	203	32	M22 x 150	915	1589395	5676410	151	119
T121580	580	675	190	203	32	M22 x 150	915	1646159	5676410	147	123
T121600	600	695	190	203	33	M22 x 150	915	1756139	5853798	147	128

B-LOC B115



Locking screws transfer to integrated push-off holes for disassembly.

Metric socket head locking screws ISO 4762 grade 12.9 (See M_a for install torque).

Screw head height = screw diameter (mm)

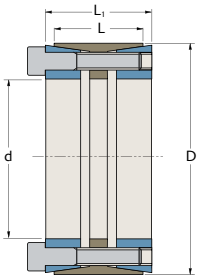

TOLERANCE (T_L)

Bore diameter machined to D -0/+T_L

T_L = .002" for bores up to 4.724"
.003" for bores up to 12.008"
.004" for bores up to 25.000"
.005" for bores over 25.000"

T_L = .05mm for bores up to 120mm
.08mm for bores up to 305mm
.10mm for bores up to 635mm
.13mm for bores over 635mm

d = shaft diameter machined to d +0/-T_L

B115 — Medium Duty — Inch

Part Number	d (inch)	D (inch)	L (inch)	L_1 (inch)	Locking Screws Qty	Locking Screws Size	M_a Install Torque (ft lb)	Mt Maximum Transmitted Torque (ft lb)	Th Maximum Transmitted Thrust (lbs)	Ph Hub Pressure (psi)	Shipping Weight (lb)
B152212	2 3/4	4.331	1.969	2.441	8	M10 x 50	60	5261	45913	17858	5
B152215	2 15/16	4.528	1.969	2.441	8	M10 x 50	60	5620	45913	17079	5
T152307	3 7/16	5.118	1.969	2.441	11	M10 x 50	60	9042	63131	20777	7
B152308	3 1/2	5.118	1.969	2.441	11	M10 x 50	60	9207	63131	20777	6
B152315	3 15/16	5.709	2.362	2.835	10	M12 x 60	105	14086	85858	21111	9
B152407	4 7/16	6.496	2.362	2.835	11	M12 x 60	105	17462	94444	20408	12
T152408	4 1/2	6.496	2.362	2.835	11	M12 x 60	105	17708	94444	20408	11
T152415	4 15/16	7.087	2.559	3.189	14	M12 x 70	105	24729	120202	21162	15
T152500	5	7.087	2.559	3.189	14	M12 x 70	105	25042	120202	21162	15
B152507	5 7/16	7.480	2.559	3.228	15	M12 x 70	105	29178	128787	21482	15
B152515	5 15/16	7.874	2.559	3.228	15	M12 x 70	105	31861	128787	20407	16
T152600	6	8.268	2.559	3.228	16	M12 x 70	105	34343	137373	20731	19
T152607	6 7/16	8.858	3.071	3.661	15	M14 x 80	166	47013	175273	20830	25
B152615	6 15/16	9.252	3.071	3.661	15	M14 x 80	166	50665	175273	19944	25
B152715	7 15/16	10.236	3.465	4.134	18	M14 x 80	166	69561	210328	18216	31
T152800	8	10.236	3.465	4.134	18	M14 x 80	166	70109	210328	18216	32

B115 — Medium Duty — Metric

Part Number	d (mm)	D (mm)	L (mm)	L_1 (mm)	Locking Screws Qty	Locking Screws Size	M_a Install Torque (Nm)	Mt Maximum Transmitted Torque (Nm)	Th Maximum Transmitted Thrust (N)	Ph Hub Pressure (N/mm^2)	Shipping Weight (kg)
B151070	70	110	50	62	8	M10 x 50	81	7118	203362	123	2
T151075	75	115	50	62	8	M10 x 50	81	7626	203362	117	2
T151080	80	120	50	62	10	M10 x 50	81	10168	254202	140	3
T151090	90	130	50	62	11	M10 x 50	81	12583	279622	143	3
T151095	95	135	50	62	11	M10 x 50	81	13282	279622	137	4
B151100	100	145	60	72	10	M12 x 60	142	19048	380966	145	4
T151110	110	155	60	72	10	M12 x 60	142	20953	380966	136	4
B151120	120	165	60	72	11	M12 x 60	142	25144	419063	140	5
T151130	130	180	65	81	14	M12 x 70	142	34668	533353	146	6
B151140	140	190	65	82	15	M12 x 70	142	40001	571449	148	7
B151150	150	200	65	82	15	M12 x 70	142	42859	571449	140	7
B151160	160	210	65	82	16	M12 x 70	142	48764	609546	143	8
B151170	170	225	78	93	15	M14 x 80	225	66254	779456	144	11
B151180	180	235	78	93	15	M14 x 80	225	70151	779456	137	11
B151190	190	250	88	105	16	M14 x 80	225	78985	831420	116	14
B151200	200	260	88	105	18	M14 x 80	225	93535	935348	126	15
B151220	220	285	96	111	15	M16 x 90	348	116872	1062472	121	19
B151240	240	305	96	111	20	M16 x 90	348	169995	1416629	150	20
T151260	260	325	96	111	21	M16 x 90	348	193370	1487460	148	22
T151280	280	355	96	111	15	M20 x 90	678	231548	1653915	163	27
T151300	300	375	96	111	15	M20 x 90	678	248087	1653915	154	30
T151320	320	405	124	136	20	M20 x 110	678	352835	2205220	150	44
T151340	340	425	124	136	20	M20 x 110	678	374887	2205220	143	47
T151360	360	455	140	160	20	M22 x 130	915	491542	2730791	133	66
T151380	380	475	140	160	20	M22 x 130	915	518850	2730791	127	69
T151400	400	495	140	160	22	M22 x 130	915	600774	3003871	134	72
T151420	420	515	140	160	24	M22 x 130	915	688159	3276950	141	75
T151440	440	535	140	160	24	M22 x 130	915	720929	3276950	135	78
T151460	460	555	140	160	24	M22 x 130	915	753698	3276950	131	82
T151480	480	575	140	160	25	M22 x 130	915	819237	3413489	131	84
T151500	500	595	140	160	25	M22 x 130	915	853372	3413489	127	88
T151520	520	615	140	160	28	M22 x 130	915	994008	3823108	137	91
T151540	540	635	140	160	28	M22 x 130	915	1032239	3823108	133	94
T151560	560	655	140	160	30	M22 x 130	915	1146932	4096187	138	97
T151580	580	675	140	160	30	M22 x 130	915	1187894	4096187	134	100
T151600	600	695	140	160	30	M22 x 130	915	1228856	4096187	130	103



Locking screws transfer to integrated push-off holes for disassembly.

Metric socket head locking screws ISO 4762 grade 12.9 (See M_a for install torque).

Screw head height = screw diameter (mm)

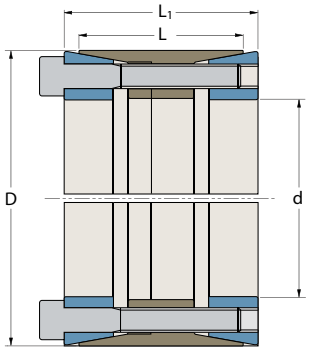

TOLERANCE (T_L)

Bore diameter machined to D -0/+T_L

T_L = .064mm for bores up to 285mm
.08mm for bores up to 355mm
.09mm for bores up to 615mm
.10mm for bores up to 675mm
.13mm for bores over 675mm

d = shaft diameter machined to d +0/-T_L

B113 – Extra Heavy Duty – Metric

Part Number	d (mm)	D (mm)	L (mm)	L_1 (mm)	Locking Screws		M_a	M_t	Th	Ph	Shipping Weight (kg)
							Install Torque (Nm)	Maximum Transmitted		Hub Pressure (N/mm^2)	
					Qty	Size		Torque (Nm)	Thrust (N)		
T131180	180	285	205	231	14	M22 x 180	915	223566	2483935	139	62
T131200	200	305	205	233	16	M22 x 180	915	283878	2838783	149	67
T131220	220	325	205	229	16	M22 x 180	915	312251	2838783	141	73
T131240	240	355	208	240	16	M24 x 180	1180	400322	3335957	147	88
T131260	260	375	208	240	18	M24 x 180	1180	487873	3752951	156	93
T131280	280	405	208	238	20	M24 x 180	1180	583812	4169946	163	110
T131300	300	425	208	240	20	M24 x 180	1180	625491	4169946	153	117
T131320	320	455	250	280	18	M27 x 220	1763	803261	5020549	149	161
T131340	340	475	250	285	20	M27 x 220	1763	948338	5578387	156	170
T131360	360	495	250	283	22	M27 x 220	1763	1104503	6136226	164	177
T131380	380	515	250	280	22	M27 x 220	1763	1165912	6136226	160	186
T131400	400	535	250	280	22	M27 x 220	1763	1227243	6136226	152	192
T131420	420	555	250	285	24	M27 x 220	1763	1405717	6694065	160	202
T131440	440	575	250	285	24	M27 x 220	1763	1472708	6694065	154	210
T131460	460	595	250	285	24	M27 x 220	1763	1539615	6694065	149	220
T131480	480	615	250	285	28	M27 x 220	1763	1874374	7809742	168	227
T131500	500	635	250	280	28	M27 x 220	1763	1952432	7809742	163	233
T131520	520	655	250	285	28	M27 x 220	1763	2030489	7809742	158	244
T131540	540	675	250	280	30	M27 x 220	1763	2259264	8367581	164	251
T131560	560	695	250	280	30	M27 x 220	1763	2342897	8367581	160	260

B-LOC B117



Metric socket head
locking screws
ISO 4762 grade 12.9
(See M_a for install
torque).

Screw head height = screw diameter (mm)

TOLERANCE (T_L)

Bore diameter machined to D -0/+T_L
T_L = .05mm for bores up to 120mm
.08mm for bores up to 305mm
.10mm for bores over 305mm

d = Shaft diameter machined to d +0/-T_L

B117 — High-Bending — Metric

Part Number	d (mm)	D (mm)	D_1 (mm)	L (mm)	L_1 (mm)	L_2 (mm)	Locking Screws						M_{t1}	M_{t2}	M_{ttot}	Th_1	Th_2	Th_{tot}	P_{h1}	P_{h2}	Shipping Weight (kg)
							SIZE 1			SIZE 2			Maximum Transmitted			Maximum Transmitted			Hub Pressure (N/mm^2)	Hub Pressure (N/mm^2)	
							Qty.	Size	M_a Install Torque (Nm)	Qty.	Size	M_a Install Torque (Nm)	Torque (Nm)	Torque (Nm)	Torque (Nm)	Thrust (N)	Thrust (N)	Thrust (N)			
B171180	180	250	256	40	122	92	8	M20 x 70	678	8	M16 x 110	348	51569	33128	84697	572990	368088	941078	152	98	21
B171190	190	270	276	40	122	92	10	M20 x 70	678	10	M16 x 110	348	68043	43710	111753	716238	460110	1176347	176	113	22
B171200	200	270	276	40	122	92	10	M20 x 70	678	10	M16 x 110	348	71624	46011	117635	716238	460110	1176347	176	113	23
B171220	220	290	296	40	122	92	10	M20 x 70	678	10	M16 x 110	348	78786	50612	129398	716238	460110	1176347	164	105	25
B171240	240	310	316	40	122	92	12	M20 x 70	678	12	M16 x 110	348	103138	66256	169394	859485	552132	1411617	184	118	28
B171260	260	330	336	40	122	92	12	M20 x 70	678	12	M16 x 110	348	111733	71777	183510	859485	552132	1411617	173	111	29
B171280	280	365	371	45	144	108	10	M24 x 80	1180	10	M20 x 130	678	145918	100273	246192	1042274	716238	1758512	168	116	45
B171300	300	385	391	45	144	108	10	M24 x 80	1180	10	M20 x 130	678	156341	107436	263777	1042274	716238	1758512	160	110	48
B171340	340	425	431	45	144	108	14	M24 x 80	1180	14	M20 x 130	678	248061	170465	418526	1459184	1002733	2461917	202	139	54
B171380	380	465	471	45	144	108	16	M24 x 80	1180	16	M20 x 130	678	316851	217736	534588	1667639	1145980	2813619	211	145	58
B171400	400	485	491	45	144	108	16	M24 x 80	1180	16	M20 x 130	678	333528	229196	562724	1667639	1145980	2813619	203	139	62
B171420	420	505	511	45	144	108	16	M24 x 80	1180	16	M20 x 130	678	350204	240656	590860	1667639	1145980	2813619	195	134	65
B171440	440	525	531	59	178	147	16	M24 x 100	1180	16	M20 x 150	678	366881	252116	618996	1667639	1145980	2813619	143	98	82
B171460	460	545	551	59	178	147	16	M24 x 100	1180	16	M20 x 150	678	383557	263575	647132	1667639	1145980	2813619	138	95	85
B171480	480	565	571	59	178	147	16	M24 x 100	1180	16	M20 x 150	678	400233	275035	675269	1667639	1145980	2813619	133	91	90
B171500	500	585	591	59	178	147	18	M24 x 100	1180	18	M20 x 150	678	469023	322307	791330	1876094	1289228	3165322	144	99	93
B171520	520	605	611	59	178	147	18	M24 x 100	1180	18	M20 x 150	678	487784	335199	822984	1876094	1289228	3165322	139	96	97
B171540	540	625	631	59	178	147	18	M24 x 100	1180	18	M20 x 150	678	506545	348092	854637	1876094	1289228	3165322	135	93	100
B171560	560	645	651	59	178	147	18	M24 x 100	1180	18	M20 x 150	678	525306	360984	886290	1876094	1289228	3165322	131	90	103
B171580	580	665	671	59	178	147	20	M24 x 100	1180	20	M20 x 150	678	604519	415418	1019937	2084549	1432475	3517024	141	97	107
B171600	600	685	691	59	178	147	20	M24 x 100	1180	20	M20 x 150	678	625365	429743	1055107	2084549	1432475	3517024	137	94	110

Additional sizes available upon request.

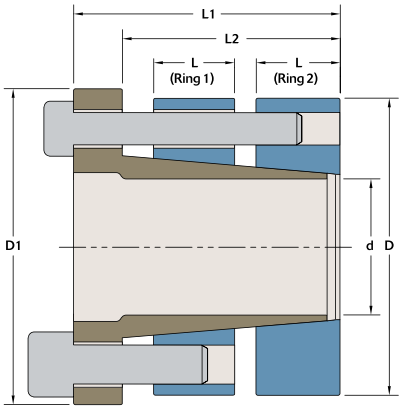

B117 Units, d ≤ 420mm

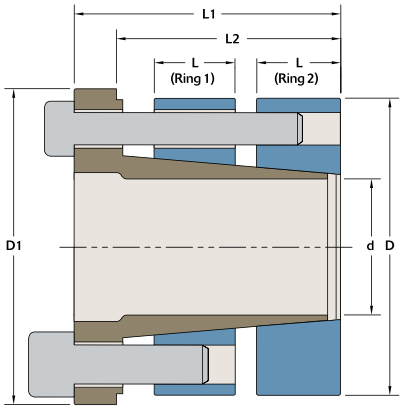

B117 Units, d ≥ 440mm



Locking screws transfer to integrated push-off holes for disassembly.

Metric socket head locking screws ISO 4762 grade 12.9 (See M_a for install torque).

Screw head height = screw diameter (mm)

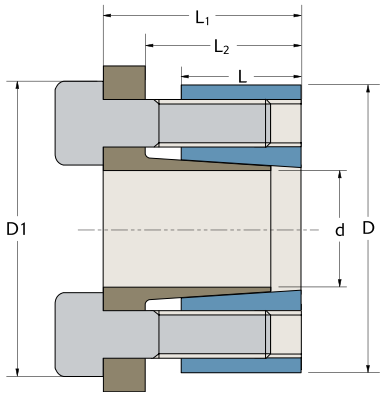

TOLERANCE (T_L)

Tolerance (T_L) for shaft and bore is ± .001" (.025mm) for all sizes.

B109 — Inch

Part Number	d (inch)	D (inch)	D_1 (inch)	L (inch)	L_1 (inch)	L_2 (inch)	Locking Screws Qty	Locking Screws Size	M_a Install Torque (in lb)	M_t Maximum Transmitted Torque (in lb)	Th Maximum Transmitted Thrust (lbs)	Ph Hub Pressure (psi)	Shipping Weight (lb)
T902004	1/4	13/16	15/16	0.394	0.650	0.516	3	M4 x 12	36.0	167	1336	11073	0.1
T902005	5/16	7/8	1	0.394	0.650	0.516	3	M4 x 12	42.5	246	1572	12096	0.1
T902006	3/8	15/16	1 1/16	0.394	0.650	0.516	3	M4 x 12	42.5	295	1572	11290	0.1
B902008	1/2	1 1/16	1 3/16	0.394	0.650	0.516	4	M4 x 12	42.5	524	2096	13282	0.1
T902010	5/8	1 3/16	1 5/16	0.472	0.807	0.594	6	M4 x 14	42.5	983	3144	14880	0.2
B902012	3/4	1 5/16	1 7/16	0.472	0.807	0.594	6	M4 x 14	42.5	1179	3144	13463	0.2
T902014	7/8	1 9/16	1 3/4	0.591	0.984	0.754	6	M5 x 18	87.0	2264	5174	14863	0.4
B902100	1	1 11/16	1 7/8	0.591	0.984	0.754	8	M5 x 18	87.0	3449	6899	18349	0.4
T902102	1 1/8	1 7/8	2	0.669	1.102	0.829	9	M5 x 18	87.0	4366	7761	16412	0.6
T902103	1 3/16	1 15/16	2 1/16	0.669	1.102	0.829	10	M5 x 18	87.0	5120	8623	17647	0.6
B902104	1 1/4	2	2 1/8	0.669	1.102	0.829	10	M5 x 18	87.0	5390	8623	17096	0.6
B902106	1 3/8	2 1/8	2 1/4	0.669	1.102	0.829	10	M5 x 18	87.0	5929	8623	16090	0.6

B109 — Metric

Part Number	d (mm)	D (mm)	D_1 (mm)	L (mm)	L_1 (mm)	L_2 (mm)	Locking Screws Qty	Locking Screws Size	M_a Install Torque (Nm)	M_t Maximum Transmitted Torque (Nm)	Th Maximum Transmitted Thrust (N)	Ph Hub Pressure (N/mm^2)	Shipping Weight (kg)
T901006	6	20.64	23.81	10	16.5	13.1	3	M4 x 12	4.3	19	6192	80	0.05
T901008	8	22.23	25.40	10	16.5	13.1	3	M4 x 12	5	29	7285	87	0.05
B901010	10	23.81	27.00	10	16.5	13.1	3	M4 x 12	5	36	7285	81	0.05
T901011	11	26.99	30.16	10	16.5	13.1	4	M4 x 12	5	53	9713	95	0.05
T901012	12	26.99	30.16	10	16.5	13.1	4	M4 x 12	5	58	9713	95	0.05
T901014	14	30.16	33.34	12	20.5	15.1	6	M4 x 14	5	102	14569	107	0.05
T901015	15	30.16	33.34	12	20.5	15.1	6	M4 x 14	5	109	14569	107	0.09
T901016	16	30.16	33.34	12	20.5	15.1	6	M4 x 14	5	117	14569	107	0.09
T901019	19	33.34	36.51	12	20.5	15.1	6	M4 x 14	5	138	14569	97	0.09
T901020	20	39.69	44.45	15	25	19.2	6	M5 x 18	10	234	23414	104	0.18
T901022	22	39.69	44.45	15	25	19.2	6	M5 x 18	10	258	23414	104	0.18
T901024	24	42.86	47.62	15	25	19.2	8	M5 x 18	10	375	31219	129	0.18
T901025	25	42.86	47.62	15	25	19.2	8	M5 x 18	10	390	31219	129	0.18
T901028	28	47.62	50.80	17	28	21.06	9	M5 x 18	10	492	35121	115	0.27
T901030	30	49.21	52.39	17	28	21.06	10	M5 x 18	10	585	39024	124	0.27
T901032	32	50.80	53.97	17	28	21.06	10	M5 x 18	10	624	39024	120	0.27
T901035	35	53.98	57.15	17	28	21.06	10	M5 x 18	10	683	39024	113	0.27

B-LOC B106



Locking screws transfer to integrated push-off holes for disassembly.

Metric socket head locking screws ISO 4762 grade 12.9 (See M_a for install torque).

Screw head height = screw diameter (mm)

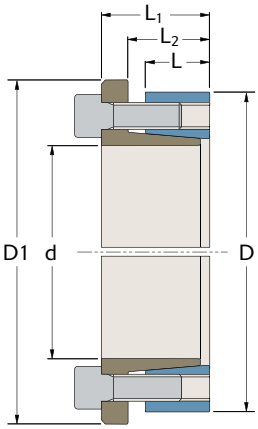

TOLERANCE (T_L)

Bore dia. machined to D -0/+T_L
T_L = .002" for bores up to 4.724"
.003" for bores up to 12.008"
.004" for bores over 12.008"

d = Shaft diameter machined to d +0/-T_L

B106 — Inch

Part Number	d (inch)	D (inch)	D_1 (inch)	L (inch)	L_1 (inch)	L_2 (inch)	Locking Screws		M_a	M_t	Th	Ph	Shipping Weight (lb)
									Install Torque (ft lb)	Maximum Transmitted		Hub Pressure (psi)	
							Qty	Size		Torque (ft lb)	Thrust (lbs)		
T602010	5/8	1.260	1.457	0.551	0.846	0.709	4	M4 x 12	3.5	55	2096	8007	0.6
B602012	3/4	1.850	2.047	0.669	1.122	0.886	5	M6 x 20	12	187	5997	12845	0.6
B602014	7/8	1.850	2.047	0.669	1.122	0.886	5	M6 x 20	12	219	5997	12845	0.7
T602015	15/16	1.969	2.224	0.669	1.122	0.886	5	M6 x 20	12	234	5997	12071	0.6
B602100	1	1.969	2.224	0.669	1.122	0.886	6	M6 x 20	12	300	7196	14489	0.7
B602102	1 1/8	2.165	2.421	0.669	1.122	0.886	6	M6 x 20	12	337	7196	13172	0.8
B602103	1 3/16	2.165	2.421	0.669	1.122	0.886	6	M6 x 20	12	356	7196	13172	0.7
B602104	1 1/4	2.362	2.618	0.669	1.122	0.886	8	M6 x 20	12	500	9595	16099	0.9
B602106	1 3/8	2.362	2.618	0.669	1.122	0.886	8	M6 x 20	12	550	9595	16099	0.8
B602107	1 7/16	2.559	2.815	0.669	1.122	0.886	8	M6 x 20	12	575	9595	14860	1.0
B602108	1 1/2	2.559	2.815	0.669	1.122	0.886	8	M6 x 20	12	600	9595	14860	1.0
B602110	1 5/8	2.953	3.287	0.787	1.358	1.043	7	M8 x 25	30	1090	16094	18362	1.7
B602111	1 11/16	2.953	3.287	0.787	1.358	1.043	7	M8 x 25	30	1132	16094	18362	1.6
B602112	1 3/4	2.953	3.287	0.787	1.358	1.043	7	M8 x 25	30	1174	16094	18362	1.6
B602114	1 7/8	3.150	3.484	0.787	1.358	1.043	7	M8 x 25	30	1257	16094	17214	1.8
B602115	1 15/16	3.150	3.484	0.787	1.358	1.043	7	M8 x 25	30	1299	16094	17214	1.7
B602200	2	3.150	3.484	0.787	1.358	1.043	7	M8 x 25	30	1341	16094	17214	1.6
T602202	2 1/8	3.346	3.681	0.787	1.358	1.043	8	M8 x 25	30	1629	18393	18516	1.9
B602203	2 3/16	3.346	3.681	0.787	1.358	1.043	8	M8 x 25	30	1676	18393	18516	1.8
B602204	2 1/4	3.543	3.898	0.787	1.358	1.043	8	M8 x 25	30	1724	18393	17487	2.1
B602206	2 3/8	3.543	3.898	0.787	1.358	1.043	8	M8 x 25	30	1820	18393	17487	1.9
B602207	2 7/16	3.740	4.016	0.787	1.358	1.043	9	M8 x 25	30	2102	20693	18638	2.2
B602208	2 1/2	3.740	4.016	0.787	1.358	1.043	9	M8 x 25	30	2155	20693	18638	2.2
T602209	2 9/16	3.740	4.016	0.787	1.358	1.043	9	M8 x 25	30	2209	20693	18638	2.1
T602211	2 11/16	4.331	4.685	0.945	1.594	1.201	8	M10 x 30	60	3340	29831	19337	3.8
B602212	2 3/4	4.331	4.685	0.945	1.594	1.201	8	M10 x 30	60	3418	29831	19337	3.7
B602214	2 7/8	4.528	4.882	0.945	1.594	1.201	8	M10 x 30	60	3573	29831	18496	4.0
B602215	2 15/16	4.528	4.882	0.945	1.594	1.201	8	M10 x 30	60	3651	29831	18496	3.9
B602300	3	4.724	5.079	0.945	1.594	1.201	8	M10 x 30	60	3729	29831	17726	4.4
B602304	3 1/4	4.921	5.276	0.945	1.594	1.201	9	M10 x 30	60	4545	33559	19144	4.5
T602306	3 3/8	4.921	5.276	0.945	1.594	1.201	9	M10 x 30	60	4719	33559	19144	4.3
B602307	3 7/16	5.118	5.472	0.945	1.594	1.201	9	M10 x 30	60	4807	33559	18408	4.8
B602308	3 1/2	5.118	5.472	0.945	1.594	1.201	9	M10 x 30	60	4894	33559	18408	4.6
T602312	3 3/4	5.315	5.669	0.945	1.594	1.201	10	M10 x 30	60	5826	37288	19695	4.7
T602315	3 15/16	5.709	6.063	1.024	1.772	1.299	8	M12 x 35	105	7322	44627	20258	6
B602400	4	5.709	6.063	1.024	1.772	1.299	8	M12 x 35	105	7438	44627	20258	6
B602407	4 7/16	6.102	6.457	1.024	1.772	1.299	8	M12 x 35	105	8251	44627	18951	6
T602412	4 3/4	6.496	6.850	1.024	1.772	1.299	9	M12 x 35	105	9936	50205	20028	7
B602415	4 15/16	7.087	7.441	1.339	2.165	1.614	9	M14 x 40	166	14057	68327	19106	11
T602500	5	7.087	7.441	1.339	2.165	1.614	9	M14 x 40	166	14235	68327	19106	11
B602507	5 7/16	7.480	7.835	1.339	2.165	1.614	9	M14 x 40	166	15480	68327	18101	12
B602515	5 15/16	7.874	8.228	1.339	2.165	1.614	10	M14 x 40	166	18782	75918	19106	12
B602607	6 7/16	8.858	9.213	1.732	2.559	2.008	12	M14 x 40	166	24436	91102	15748	20
T602615	6 15/16	9.252	9.606	1.732	2.559	2.008	12	M14 x 40	166	26334	91102	15078	20
B602700	7	9.252	9.606	1.732	2.559	2.008	12	M14 x 40	166	26571	91102	15078	20
B602707	7 7/16	9.843	10.197	1.732	2.559	2.008	15	M14 x 40	166	35290	113878	17717	22
T602715	7 15/16	10.236	10.591	1.732	2.559	2.008	15	M14 x 40	166	37663	113878	17035	23
T602800	8	10.236	10.591	1.732	2.559	2.008	15	M14 x 40	166	37959	113878	17035	21

TOLERANCE (T_L)

Bore diameter machined to D -0/+T_L
T_L = .05mm for bores up to 120mm
.08mm for bores up to 305mm
.10mm for bores over 305mm

d = Shaft diameter machined to d +0/-T_L

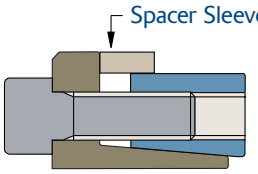

Note: Series B106 also available with optional integrated spacer sleeve (ideal for very narrow drive elements). Spacers are 0.275" wide for B106 sizes with D=2.559" (65mm) and smaller, and 0.315" wide for all others.

B106 — Metric

Part Number	d (mm)	D (mm)	D_1 (mm)	L (mm)	L_1 (mm)	L_2 (mm)	Locking Screws		M_a	M_t	Th	P_h	Shipping Weight (kg)
									Install Torque (Nm)	Maximum Transmitted		Hub Pressure (N/mm^2)	
							Qty	Size		Torque (Nm)	Thrust (N)		
T601014	14	28	32	14	20.5	17	4	M4 x 12	5	68	9713	66	0.1
T601015	15	28	32	14	20.5	17	4	M4 x 12	5	73	9713	66	0.1
T601018	18	47	52	17	28.5	22.5	5	M6 x 20	16	236	26234	87	0.3
T601019	19	47	52	17	28.5	22.5	5	M6 x 20	16	249	26234	87	0.3
T601020	20	47	52	17	28.5	22.5	5	M6 x 20	16	262	26234	87	0.3
B601022	22	47	52	17	28.5	22.5	5	M6 x 20	16	289	26234	87	0.3
T601024	24	50	56.5	17	28.5	22.5	6	M6 x 20	16	378	31481	98	0.3
B601025	25	50	56.5	17	28.5	22.5	6	M6 x 20	16	394	31481	98	0.3
B601028	28	55	61.5	17	28.5	22.5	6	M6 x 20	16	441	31481	89	0.4
B601030	30	55	61.5	17	28.5	22.5	6	M6 x 20	16	472	31481	89	0.3
T601032	32	60	66.5	17	28.5	22.5	8	M6 x 20	16	672	41975	109	0.4
B601035	35	60	66.5	17	28.5	22.5	8	M6 x 20	16	735	41975	109	0.4
T601038	38	65	71.5	17	28.5	22.5	8	M6 x 20	16	798	41975	101	0.5
B601040	40	65	71.5	17	28.5	22.5	8	M6 x 20	16	839	41975	101	0.5
T601042	42	75	83.5	20	34.5	26.5	7	M8 x 25	41	1515	72167	128	0.8
B601045	45	75	83.5	20	34.5	26.5	7	M8 x 25	41	1624	72167	128	0.7
T601048	48	80	88.5	20	34.5	26.5	7	M8 x 25	41	1732	72167	120	0.8
B601050	50	80	88.5	20	34.5	26.5	7	M8 x 25	41	1804	72167	120	0.8
B601055	55	85	93.5	20	34.5	26.5	8	M8 x 25	41	2268	82476	129	0.8
B601060	60	90	98	20	34.5	26.5	8	M8 x 25	41	2474	82476	122	0.9
T601063	63	95	102	20	34.5	26.5	9	M8 x 25	41	2923	92786	130	0.9
T601065	65	95	102	20	34.5	26.5	9	M8 x 25	41	3016	92786	130	0.9
T601070	70	110	119	24	40.5	30.5	8	M10 x 30	81	4624	132127	133	1.7
B601075	75	115	124	24	40.5	30.5	8	M10 x 30	81	4955	132127	127	1.8
B601080	80	120	129	24	40.5	30.5	8	M10 x 30	81	5285	132127	122	1.9
T601085	85	125	134	24	40.5	30.5	9	M10 x 30	81	6317	148643	131	2
B601090	90	130	139	24	40.5	30.5	9	M10 x 30	81	6689	148643	126	2
T601095	95	135	144	24	40.5	30.5	10	M10 x 30	81	7845	165159	135	2
B601100	100	145	154	26	45	33	8	M12 x 35	142	9901	198016	139	3
B601110	110	155	164	26	45	33	8	M12 x 35	142	10891	198016	130	3
B601120	120	165	174	26	45	33	9	M12 x 35	142	13366	222768	138	3
T601130	130	180	189	34	55	41	9	M14 x 40	225	19751	303855	132	5
B601140	140	190	199	34	55	41	9	M14 x 40	225	21270	303855	125	5
T601150	150	200	209	34	55	41	10	M14 x 40	225	25321	337617	132	6
B601160	160	210	219	34	55	41	11	M14 x 40	225	29710	371379	138	6
B601170	170	225	234	44	65	51	12	M14 x 40	225	34437	405140	109	8
B601180	180	235	244	44	65	51	12	M14 x 40	225	36463	405140	104	9
T601190	190	250	259	44	65	51	15	M14 x 40	225	48110	506425	122	10
B601200	200	260	269	44	65	51	15	M14 x 40	225	50643	506425	117	10
T601220	220	285	294	50	73	57	12	M16 x 45	348	60747	552244	103	14
T601240	240	305	314	50	73	57	15	M16 x 45	348	82837	690305	120	15
T601260	260	325	334	50	73	57	18	M16 x 45	348	107688	828366	135	16
T601280	280	355	364	60	85	67	16	M18 x 50	475	124894	892098	111	23
T601300	300	375	384	60	85	67	18	M18 x 50	475	150542	1003610	118	25
T601320	320	405	414	74	102	82	18	M20 x 50	678	206318	1289490	114	35
T601340	340	425	434	74	102	82	21	M20 x 50	678	255749	1504405	127	37
T601360	360	455	464	86	116	94	18	M22 x 60	915	287427	1596815	108	51
T601380	380	475	484	86	116	94	21	M22 x 60	915	353961	1862951	121	53
T601400	400	495	504	86	116	94	21	M22 x 60	915	372590	1862951	116	57

B-LOC B103



Locking screws transfer to integrated push-off holes for disassembly.

Metric socket head locking screws ISO 4762 grade 12.9 (See M_a for install torque).

Screw head height = screw diameter (mm)

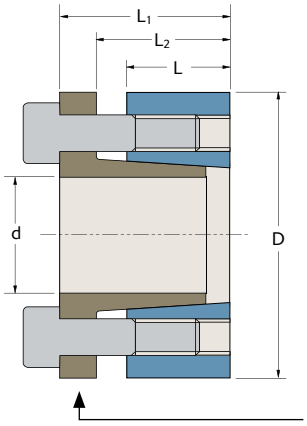

TOLERANCE (T_L)

Bore diameter machined to D -0/+T_L
T_L = .002" for bores up to 4.724"
.003" for bores up to 12.008"
.004" for bores over 12.008"

d = Shaft diameter machined to d +0/-T_L

Note: Flange of Series B103 locking assemblies should be located inside of hub bore.

B103 — Inch

Part Number	d (inch)	D (inch)	L (inch)	L_1 (inch)	L_2 (inch)	Locking Screws Qty	Locking Screws Size	M_a Install Torque (ft lb)	M_t Maximum Transmitted Torque (ft lb)	Th Maximum Transmitted Thrust (lbs)	P_h Hub Pressure (psi)	Shipping Weight (lb)
B302012	3/4	1.850	0.669	1.122	0.886	5	M6 x 20	10	247	7918	16959	0.6
T302014	7/8	1.850	0.669	1.122	0.886	5	M6 x 20	10	289	7918	16959	0.6
B302100	1	1.969	0.669	1.122	0.886	6	M6 x 20	10	396	9502	19130	0.7
B302102	1 1/8	2.165	0.669	1.122	0.886	6	M6 x 20	10	445	9502	17391	0.8
B302103	1 3/16	2.165	0.669	1.122	0.886	6	M6 x 20	10	470	9502	17391	0.7
B302104	1 1/4	2.362	0.669	1.122	0.886	8	M6 x 20	10	660	12669	21256	0.9
B302106	1 3/8	2.362	0.669	1.122	0.886	8	M6 x 20	10	726	12669	21256	0.8
B302107	1 7/16	2.559	0.669	1.122	0.886	8	M6 x 20	10	759	12669	19621	1.0
B302108	1 1/2	2.559	0.669	1.122	0.886	8	M6 x 20	10	792	12669	19621	1.0
B302110	1 5/8	2.953	0.787	1.358	1.043	7	M8 x 25	25	1439	21250	24245	1.7
T302111	1 11/16	2.953	0.787	1.358	1.043	7	M8 x 25	25	1494	21250	24245	1.6
B302112	1 3/4	2.953	0.787	1.358	1.043	7	M8 x 25	25	1550	21250	24245	1.6
T302114	1 7/8	3.150	0.787	1.358	1.043	7	M8 x 25	25	1660	21250	22729	1.8
B302115	1 15/16	3.150	0.787	1.358	1.043	7	M8 x 25	25	1716	21250	22729	1.7
B302200	2	3.150	0.787	1.358	1.043	7	M8 x 25	25	1771	21250	22729	1.6
T302202	2 1/8	3.346	0.787	1.358	1.043	8	M8 x 25	25	2150	24286	24448	1.9
B302203	2 3/16	3.346	0.787	1.358	1.043	8	M8 x 25	25	2214	24286	24448	1.8
B302204	2 1/4	3.543	0.787	1.358	1.043	8	M8 x 25	25	2277	24286	23090	2.1
T302206	2 3/8	3.543	0.787	1.358	1.043	8	M8 x 25	25	2403	24286	23090	1.9
B302207	2 7/16	3.740	0.787	1.358	1.043	9	M8 x 25	25	2775	27322	24609	2.2
B302208	2 1/2	3.740	0.787	1.358	1.043	9	M8 x 25	25	2846	27322	24609	2.2
T302209	2 9/16	3.740	0.787	1.358	1.043	9	M8 x 25	25	2917	27322	24609	2.1
T302211	2 11/16	4.331	0.945	1.594	1.201	8	M10 x 30	50	4411	39387	25532	3.8
T302212	2 3/4	4.331	0.945	1.594	1.201	8	M10 x 30	50	4513	39387	25532	3.7
T302214	2 7/8	4.528	0.945	1.594	1.201	8	M10 x 30	50	4718	39387	24422	4.0
B302215	2 15/16	4.528	0.945	1.594	1.201	8	M10 x 30	50	4821	39387	24422	3.9
B302300	3	4.724	0.945	1.594	1.201	8	M10 x 30	50	4923	39387	23404	4.4
T302304	3 1/4	4.921	0.945	1.594	1.201	9	M10 x 30	50	6000	44311	25277	4.5
T302306	3 3/8	4.921	0.945	1.594	1.201	9	M10 x 30	50	6231	44311	25277	4.3
B302307	3 7/16	5.118	0.945	1.594	1.201	9	M10 x 30	50	6347	44311	24305	4.8
T302308	3 1/2	5.118	0.945	1.594	1.201	9	M10 x 30	50	6462	44311	24305	4.6
T302312	3 3/4	5.315	0.945	1.594	1.201	10	M10 x 30	50	7693	49234	26005	4.7
T302315	3 15/16	5.709	1.024	1.772	1.299	8	M12 x 35	90	9944	60608	27512	6
T302400	4	5.709	1.024	1.772	1.299	8	M12 x 35	90	10101	60608	27512	6
T302407	4 7/16	6.102	1.024	1.772	1.299	8	M12 x 35	90	11206	60608	25737	6
T302412	4 3/4	6.496	1.024	1.772	1.299	9	M12 x 35	90	13495	68184	27200	7
T302415	4 15/16	7.087	1.339	2.165	1.614	9	M14 x 40	135	18113	88043	24620	11
B302500	5	7.087	1.339	2.165	1.614	9	M14 x 40	135	18342	88043	24620	11
T302507	5 7/16	7.480	1.339	2.165	1.614	9	M14 x 40	135	19947	88043	23324	12
T302515	5 15/16	7.874	1.339	2.165	1.614	10	M14 x 40	135	24202	97825	24620	12
T302607	6 7/16	8.858	1.732	2.559	2.008	12	M14 x 40	135	31488	117391	20292	20
T302615	6 15/16	9.252	1.732	2.559	2.008	12	M14 x 40	135	33933	117391	19429	20
B302700	7	9.252	1.732	2.559	2.008	12	M14 x 40	135	34239	117391	19429	20
T302707	7 7/16	9.843	1.732	2.559	2.008	15	M14 x 40	135	45474	146738	22829	22
T302715	7 15/16	10.236	1.732	2.559	2.008	15	M14 x 40	135	48531	146738	21951	23
T302800	8	10.236	1.732	2.559	2.008	15	M14 x 40	135	48913	146738	21951	21

TOLERANCE (T_L)

Bore diameter machined to D -0/+T_L
T_L = .05mm for bores up to 120mm
.08mm for bores up to 305mm
.10mm for bores over 305mm

d = Shaft diameter machined to d +0/-T_L

B103 — Metric

Part Number	d (mm)	D (mm)	L (mm)	L_1 (mm)	L_2 (mm)	Locking Screws		M_a	M_t	Th	P_h	Shipping Weight (kg)
								Install Torque (Nm)	Maximum Transmitted			
						Qty	Size		Torque (Nm)	Thrust (N)	Hub Pressure (N/mm²)	
T301015	15	32	14	21.5	18	4	M4 x 12	5	115	15390	91	0.1
T301018	18	47	17	28.5	22.5	5	M6 x 20	14	327	36371	121	0.3
T301019	19	47	17	28.5	22.5	5	M6 x 20	14	346	36371	121	0.3
T301020	20	47	17	28.5	22.5	5	M6 x 20	14	364	36371	121	0.3
T301022	22	47	17	28.5	22.5	5	M6 x 20	14	400	36371	121	0.2
T301024	24	50	17	28.5	22.5	6	M6 x 20	14	524	43645	136	0.3
B301025	25	50	17	28.5	22.5	6	M6 x 20	14	546	43645	136	0.3
T301028	28	55	17	28.5	22.5	6	M6 x 20	14	611	43645	124	0.3
B301030	30	55	17	28.5	22.5	6	M6 x 20	14	655	43645	124	0.3
T301032	32	60	17	28.5	22.5	8	M6 x 20	14	931	58193	151	0.4
B301035	35	60	17	28.5	22.5	8	M6 x 20	14	1018	58193	151	0.3
T301038	38	65	17	28.5	22.5	8	M6 x 20	14	1106	58193	140	0.4
B301040	40	65	17	28.5	22.5	8	M6 x 20	14	1164	58193	140	0.4
T301042	42	75	20	34.5	26.5	7	M8 x 25	34	1991	94822	168	0.7
B301045	45	75	20	34.5	26.5	7	M8 x 25	34	2133	94822	168	0.6
B301050	50	80	20	34.5	26.5	7	M8 x 25	34	2371	94822	157	0.7
T301055	55	85	20	34.5	26.5	8	M8 x 25	34	2980	108368	169	0.8
B301060	60	90	20	34.5	26.5	8	M8 x 25	34	3251	108368	160	0.8
T301065	65	95	20	34.5	26.5	9	M8 x 25	34	3962	121914	170	0.9
B301070	70	110	24	40.5	30.5	8	M10 x 30	68	6151	175750	177	1.6
T301075	75	115	24	40.5	30.5	8	M10 x 30	68	6591	175750	169	1.6
T301080	80	120	24	40.5	30.5	8	M10 x 30	68	7030	175750	162	1.7
B301085	85	125	24	40.5	30.5	9	M10 x 30	68	8403	197719	175	1.8
B301090	90	130	24	40.5	30.5	9	M10 x 30	68	8897	197719	168	1.9
T301095	95	135	24	40.5	30.5	10	M10 x 30	68	10435	219688	180	2
B301100	100	145	26	45	33	8	M12 x 35	122	13478	269557	190	3
T301110	110	155	26	45	33	8	M12 x 35	122	14826	269557	177	3
B301120	120	165	26	45	33	9	M12 x 35	122	18195	303251	188	3
T301130	130	180	34	55	41	9	M14 x 40	183	25452	391574	170	5
T301140	140	190	34	55	41	9	M14 x 40	183	27410	391574	161	5
T301150	150	200	34	55	41	10	M14 x 40	183	32631	435082	170	5
T301160	160	210	34	55	41	11	M14 x 40	183	38287	478591	178	6
T301170	170	225	44	65	51	12	M14 x 40	183	44378	522099	140	8
T301180	180	235	44	65	51	12	M14 x 40	183	46989	522099	134	8
T301190	190	250	44	65	51	15	M14 x 40	183	61999	652624	157	9
T301200	200	260	44	65	51	15	M14 x 40	183	65262	652624	151	10
T301220	220	285	50	73	57	12	M16 x 45	297	82145	746770	139	13
T301240	240	305	50	73	57	15	M16 x 45	297	112016	933463	162	14
T301260	260	325	50	73	57	18	M16 x 45	297	145620	1120155	183	15
T301280	280	355	60	85	67	16	M18 x 50	393	163726	1169473	146	23
T301300	300	375	60	85	67	18	M18 x 50	393	197349	1315657	155	24
T301320	320	405	74	102	82	18	M20 x 50	569	274346	1714665	152	34
T301340	340	425	74	102	82	21	M20 x 50	569	340075	2000443	169	36
T301360	360	455	86	116	94	18	M22 x 60	759	377769	2098718	142	49
T301380	380	475	86	116	94	21	M22 x 60	759	465216	2448505	159	52
T301400	400	495	86	116	94	21	M22 x 60	759	489701	2448505	153	55

B-LOC
B800



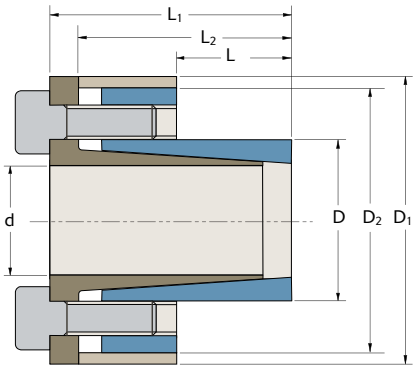

TOLERANCE (T_L)

Bore diameter machined to D -0/+T_L
T_L = .002" for bores up to 2.559"
.003" for bores over 2.559"

d = Shaft diameter machined to d +0/-T_L.

B800 — Inch

Part Number	d (inch)	D (inch)	D_1 (inch)	D_2 (inch)	L (inch)	L_1 (inch)	L_2 (inch)	Locking Screws Qty	Locking Screws Size	M_a Install Torque (ft lb)	M_t Maximum Transmitted Torque (ft lb)	Th Maximum Transmitted Thrust (lbs)	Ph Hub Pressure (psi)	Shipping Weight (lb)
B802004	1/4	0.551	0.984	0.906	0.394	0.866	0.748	3	M4 x 10	3.5	16	1572	19217	0.2
B802005	5/16	0.591	1.063	0.945	0.472	0.984	0.866	3	M4 x 10	3.5	20	1572	14947	0.3
B802006	3/8	0.630	1.142	1.024	0.551	1.063	0.945	4	M4 x 10	3.5	33	2096	16014	0.4
T82007	7/16	0.709	1.260	1.102	0.551	1.083	0.945	4	M4 x 10	3.5	38	2096	14235	0.5
B802008	1/2	0.906	1.496	1.299	0.551	1.083	0.945	4	M4 x 10	3.5	44	2096	11140	0.5
B802010	5/8	0.945	1.732	1.575	0.630	1.437	1.161	3	M6 x 16	12	94	3598	16036	0.6
B802012	3/4	1.063	1.929	1.693	0.709	1.555	1.280	4	M6 x 16	12	150	4798	16893	0.7
T82014	7/8	1.260	2.126	1.890	0.984	1.850	1.575	4	M6 x 16	12	175	4798	10263	0.8
B802015	15/16	1.339	2.205	1.969	0.984	1.850	1.575	6	M6 x 16	12	281	7196	14489	0.9
B802100	1	1.339	2.205	1.969	0.984	1.850	1.575	6	M6 x 16	12	300	7196	14489	0.9
B802102	1 1/8	1.535	2.402	2.165	0.984	1.850	1.575	6	M6 x 16	12	337	7196	12631	1.0
T82103	1 3/16	1.614	2.441	2.244	0.984	1.850	1.575	6	M6 x 16	12	356	7196	12015	1.1
B802104	1 1/4	1.693	2.559	2.323	0.984	1.850	1.575	8	M6 x 16	12	500	9595	15275	1.2
T82106	1 3/8	1.850	2.677	2.441	1.260	2.126	1.850	8	M6 x 18	12	550	9595	10918	1.4
B802107	1 7/16	1.969	2.835	2.598	1.260	2.126	1.850	8	M6 x 18	12	575	9595	10263	1.5
B802108	1 1/2	1.969	2.835	2.598	1.260	2.126	1.850	8	M6 x 18	12	600	9595	10263	1.5
B802110	1 5/8	2.165	3.071	2.795	1.260	2.126	1.850	8	M6 x 18	12	650	9595	9330	1.7
T82111	1 11/16	2.323	3.386	3.150	1.772	2.756	2.441	8	M8 x 22	30	1293	18393	11856	2.7
T82112	1 3/4	2.323	3.386	3.150	1.772	2.756	2.441	8	M8 x 22	30	1341	18393	11856	2.7
T82114	1 7/8	2.441	3.425	3.189	1.772	2.756	2.441	8	M8 x 22	30	1437	18393	11282	2.7
T82115	1 15/16	2.559	3.622	3.386	1.772	2.756	2.441	8	M8 x 22	30	1485	18393	10762	3.1
B802200	2	2.795	3.858	3.622	2.165	3.189	2.874	9	M8 x 22	30	1724	20693	9068	3.8
T82202	2 1/8	2.795	3.858	3.622	2.165	3.189	2.874	9	M8 x 22	30	1832	20693	9068	3.8
T82203	2 3/16	3.031	4.094	3.858	2.165	3.189	2.874	9	M8 x 22	30	1886	20693	8362	4.2
T82206	2 3/8	3.031	4.094	3.858	2.165	3.189	2.874	9	M8 x 22	30	2048	20693	8362	4.2
B802207	2 7/16	3.307	4.370	4.134	2.165	3.189	2.874	9	M8 x 22	30	2102	20693	7665	4.9
B802208	2 1/2	3.307	4.370	4.134	2.165	3.189	2.874	9	M8 x 22	30	2155	20693	7665	4.9
T82210	2 5/8	3.543	4.685	4.449	2.559	3.780	3.386	9	M10 x 25	60	3671	33559	9817	7
T82212	2 3/4	3.543	4.685	4.449	2.559	3.780	3.386	9	M10 x 25	60	3845	33559	9817	7
T82214	2 7/8	3.740	4.961	4.685	2.559	3.780	3.386	9	M10 x 25	60	4020	33559	9301	7
T82215	2 15/16	3.740	4.961	4.685	2.559	3.780	3.386	9	M10 x 25	60	4108	33559	9301	7
B802300	3	3.740	4.961	4.685	2.559	3.780	3.386	9	M10 x 25	60	4195	33559	9301	7
T82302	3 1/8	3.937	5.157	4.921	2.559	3.780	3.386	12	M10 x 25	60	5826	44746	11781	8
T82304	3 1/4	4.173	5.394	5.157	2.559	3.780	3.386	12	M10 x 25	60	6059	44746	11114	8
T82306	3 3/8	4.173	5.394	5.157	2.559	3.780	3.386	12	M10 x 25	60	6292	44746	11114	8
T82307	3 7/16	4.409	5.669	5.394	2.559	3.780	3.386	12	M10 x 25	60	6409	44746	10519	9
T82308	3 1/2	4.409	5.669	5.394	2.559	3.780	3.386	12	M10 x 25	60	6525	44746	10519	9
T82310	3 5/8	4.409	5.669	5.394	2.559	3.780	3.386	12	M10 x 25	60	6758	44746	10519	9
T82312	3 3/4	4.724	5.866	5.591	2.559	3.780	3.386	14	M10 x 25	60	8157	52204	11454	10
T82314	3 7/8	4.921	6.299	6.024	2.756	4.213	3.701	12	M12 x 30	105	10808	66940	13092	12
B802315	3 15/16	4.921	6.299	6.024	2.756	4.213	3.701	12	M12 x 30	105	10982	66940	13092	12
B802400	4	4.921	6.299	6.024	2.756	4.213	3.701	12	M12 x 30	105	11157	66940	13092	12
T82404	4 1/4	5.512	6.850	6.614	2.756	4.213	3.701	12	M12 x 30	105	11854	66940	11690	15
T82406	4 3/8	5.512	6.850	6.614	2.756	4.213	3.701	12	M12 x 30	105	12203	66940	11690	15
T82407	4 7/16	6.102	7.795	7.362	3.543	5.039	4.528	16	M12 x 30	105	16503	89254	10949	21
T82408	4 1/2	6.102	7.795	7.362	3.543	5.039	4.528	16	M12 x 30	105	16735	89254	10949	21
T82412	4 3/4	6.102	7.795	7.362	3.543	5.039	4.528	16	M12 x 30	105	17665	89254	10949	21
T82415	4 15/16	6.496	8.189	7.756	3.543	5.039	4.528	16	M12 x 30	105	18362	89254	10286	23

TOLERANCE (T_L)

Bore diameter machined to D -0/+T_L
T_L = .05mm for bores up to 65mm
.08mm for bores over 65mm

d = Shaft diameter machined to d +0/-T_L.

B800 — Metric

Part Number	d (mm)	D (mm)	D_1 (mm)	D_2 (mm)	L (mm)	L_1 (mm)	L_2 (mm)	Locking Screws		M_a	Mt	Th	Ph	Shipping Weight (kg)
										Install Torque (Nm)	Maximum Transmitted			
								Qty	Size		Torque (Nm)	Thrust (N)	Hub Pressure (N/mm^2)	
T8006	6	14	25	23	10	22	19	3	M4 x 10	5	22	7285	138	0.1
T8007	7	15	27	24	12	25	22	3	M4 x 10	5	25	7285	107	0.1
T8008	8	15	27	24	12	25	22	3	M4 x 10	5	29	7285	107	0.1
T8009	9	16	29	26	14	27	24	4	M4 x 10	5	44	9713	115	0.1
B801010	10	16	29	26	14	27	24	4	M4 x 10	5	49	9713	115	0.1
T8011	11	18	32	28	14	28	24	4	M4 x 10	5	53	9713	102	0.1
T8012	12	18	32	28	14	28	24	4	M4 x 10	5	58	9713	102	0.1
B801014	14	23	38	33	14	28	24	4	M4 x 10	5	68	9713	80	0.1
T8015	15	24	44	40	16	37	30	3	M6 x 16	16	118	15740	109	0.2
B801016	16	24	44	40	16	37	30	3	M6 x 16	16	126	15740	109	0.2
B801018	18	26	47	42	18	40	33	4	M6 x 16	16	189	20987	119	0.3
B801019	19	27	49	43	18	40	33	4	M6 x 16	16	199	20987	115	0.3
B801020	20	28	50	44	18	40	33	4	M6 x 16	16	210	20987	110	0.3
B801022	22	32	54	48	25	47	40	4	M6 x 16	16	231	20987	70	0.4
B801024	24	34	56	50	25	47	40	6	M6 x 16	16	378	31481	98	0.4
B801025	25	34	56	50	25	47	40	6	M6 x 16	16	394	31481	98	0.4
T8028	28	39	61	55	25	47	40	6	M6 x 16	16	441	31481	86	0.4
B801030	30	41	62	57	25	47	40	6	M6 x 16	16	472	31481	81	0.4
B801032	32	43	65	59	25	47	40	8	M6 x 16	16	672	41975	104	0.5
T8035	35	47	68	62	32	54	47	8	M6 x 18	16	735	41975	74	0.5
B801038	38	50	72	66	32	54	47	8	M6 x 18	16	798	41975	70	0.6
B801040	40	53	75	69	32	54	47	8	M6 x 18	16	839	41975	66	0.7
T8042	42	55	78	71	32	54	47	8	M6 x 18	16	881	41975	63	0.7
T8045	45	59	86	80	45	70	62	8	M8 x 22	41	1856	82476	82	1.1
T8048	48	62	87	81	45	70	62	8	M8 x 22	41	1979	82476	78	1.1
T8050	50	65	92	86	45	70	62	8	M8 x 22	41	2062	82476	75	1.3
T8055	55	71	98	92	55	81	73	9	M8 x 22	41	2552	92786	63	1.6
T8060	60	77	104	98	55	81	73	9	M8 x 22	41	2783	92786	58	1.8
T8065	65	84	111	105	55	81	73	9	M8 x 22	41	3015	92786	53	2
T8070	70	90	119	113	65	96	86	9	M10 x 25	81	5203	148643	67	3
T8075	75	95	126	119	65	96	86	9	M10 x 25	81	5575	148643	64	3
T8080	80	100	131	125	65	96	86	12	M10 x 25	81	7928	198191	81	3
T8085	85	106	137	131	65	96	86	12	M10 x 25	81	8423	198191	76	4
B801090	90	112	144	137	65	96	86	12	M10 x 25	81	8919	198191	72	4
T8095	95	120	149	142	65	96	86	14	M10 x 25	81	10983	231223	79	4
T8100	100	125	160	153	70	107	94	12	M12 x 30	142	14851	297024	90	6
T8110	110	140	174	168	70	107	94	12	M12 x 30	142	16336	297024	80	7
T8120	120	155	198	187	90	128	115	16	M12 x 30	142	23762	396032	75	10
T8130	130	165	208	197	90	128	115	16	M12 x 30	142	25742	396032	71	11

B-LOC B400



Metric socket head locking screws ISO 4762 grade 12.9 (See M_a for install torque).

(2) or (3) equally spaced zinc chromate coated screws provided solely to indicate position of partial pull out threads size d_B.

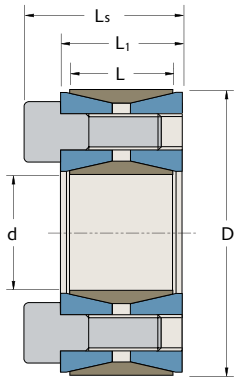

TOLERANCE (T_L)

Bore diameter machined to D -0/+T_L

T_L = .002" for bores up to 1.969"
.003" for bores up to 4.724"
.004" for bores up to 9.252"
.005" for bores up to 14.764"
.006" for bores over 14.764"

d = Shaft diameter machined to d +0/-T_L

Screw head height = screw diameter (mm)

B400 — Inch

Part Number	d (inch)	D (inch)	L (inch)	L_1 (inch)	L_s (inch)	Locking Screws Qty	Locking Screws Size	M_a Install Torque (ft lb)	d_B	M_t Maximum Transmitted Torque (ft lb)	Th Maximum Transmitted Thrust (lbs)	P_h Hub Pressure (psi)	Shipping Weight (lb)
B402012	3/4	1.850	0.669	0.787	1.024	8	M6 x 18	11	M8	234	7501	16067	0.5
B402014	7/8	1.850	0.669	0.787	1.024	8	M6 x 18	11	M8	273	7501	16067	0.5
B402100	1	1.969	0.669	0.787	1.024	9	M6 x 18	11	M8	352	8439	16991	0.5
B402102	1 1/8	2.165	0.669	0.787	1.024	10	M6 x 18	11	M8	440	9377	17162	0.6
T402103	1 3/16	2.159	0.669	0.787	1.024	10	M6 x 18	11	M8	464	9377	17212	0.6
B402104	1 1/4	2.362	0.669	0.787	1.024	12	M6 x 18	11	M8	586	11252	18880	0.7
T402106	1 3/8	2.365	0.669	0.787	1.024	12	M6 x 18	11	M8	645	11252	18856	0.6
B402107	1 7/16	2.559	0.669	0.787	1.024	14	M6 x 18	11	M8	786	13127	20331	0.8
B402108	1 1/2	2.559	0.669	0.787	1.024	14	M6 x 18	11	M8	820	13127	20331	0.7
B402110	1 5/8	2.953	0.787	0.945	1.260	12	M8 x 22	26	M10	1381	20393	23267	1.3
B402111	1 11/16	2.953	0.787	0.945	1.260	12	M8 x 22	26	M10	1434	20393	23267	1.2
B402112	1 3/4	2.953	0.787	0.945	1.260	12	M8 x 22	26	M10	1487	20393	23267	1.2
B402114	1 7/8	3.150	0.787	0.945	1.260	12	M8 x 22	26	M10	1593	20393	21812	1.3
B402115	1 15/16	3.150	0.787	0.945	1.260	12	M8 x 22	26	M10	1646	20393	21812	1.3
B402200	2	3.346	0.787	0.945	1.260	14	M8 x 22	26	M10	1983	23792	23951	1.5
B402202	2 1/8	3.346	0.787	0.945	1.260	14	M8 x 22	26	M10	2107	23792	23951	1.4
B402203	2 3/16	3.543	0.787	0.945	1.260	14	M8 x 22	26	M10	2169	23792	22622	1.6
B402204	2 1/4	3.543	0.787	0.945	1.260	14	M8 x 22	26	M10	2231	23792	22620	1.5
T402206	2 3/8	3.531	0.787	0.945	1.260	14	M8 x 22	26	M10	2354	23792	22699	1.4
B402207	2 7/16	3.740	0.787	0.945	1.260	16	M8 x 22	26	M10	2762	27191	24491	1.6
B402208	2 1/2	3.740	0.787	0.945	1.260	16	M8 x 22	26	M10	2832	27191	24491	1.6
T402209	2 9/16	3.737	0.787	0.945	1.260	16	M8 x 22	26	M10	2903	27191	24512	1.5
B402210	2 5/8	4.331	0.945	1.102	1.496	14	M10 x 25	51	M12	4139	37844	24532	2.8
B402211	2 11/16	4.331	0.945	1.102	1.496	14	M10 x 25	51	M12	4238	37844	24532	2.8
T402212	2 3/4	4.337	0.945	1.102	1.496	14	M10 x 25	51	M12	4336	37844	24496	2.7
T402214	2 7/8	4.528	0.945	1.102	1.496	14	M10 x 25	51	M12	4533	37844	23465	2.9
B402215	2 15/16	4.528	0.945	1.102	1.496	14	M10 x 25	51	M12	4632	37844	23465	2.8
B402300	3	4.724	0.945	1.102	1.496	14	M10 x 25	51	M12	4730	37844	22487	3.2
B402302	3 1/8	4.724	0.945	1.102	1.496	14	M10 x 25	51	M12	4928	37844	22487	3.0
T402304	3 1/4	4.921	0.945	1.102	1.496	16	M10 x 25	51	M12	5857	43250	24672	3.3
B402306	3 3/8	4.921	0.945	1.102	1.496	16	M10 x 25	51	M12	6082	43250	24672	3.1
B402307	3 7/16	5.118	0.945	1.102	1.496	16	M10 x 25	51	M12	6195	43250	23723	3.4
B402308	3 1/2	5.118	0.945	1.102	1.496	16	M10 x 25	51	M12	6307	43250	23723	3.4
T402312	3 3/4	5.305	0.945	1.102	1.496	18	M10 x 25	51	M12	7603	48656	25748	3.5
T402314	3 7/8	5.709	1.024	1.299	1.772	14	M12 x 30	91	M14	9320	57726	26204	4.8
T402315	3 15/16	5.709	1.024	1.299	1.772	14	M12 x 30	91	M14	9471	57726	26204	4.7
B402400	4	5.843	1.024	1.299	1.772	14	M12 x 30	91	M14	9621	57726	25602	5
T402403	4 3/16	6.102	1.024	1.299	1.772	14	M12 x 30	91	M14	10072	57726	24513	6
B402407	4 7/16	6.496	1.024	1.299	1.772	16	M12 x 30	91	M14	12198	65972	26317	6
B402408	4 1/2	6.496	1.024	1.299	1.772	16	M12 x 30	91	M14	12370	65972	26317	6
B402415	4 15/16	7.087	1.339	1.496	1.969	20	M12 x 35	91	M14	16966	82466	23060	8
T402500	5	7.087	1.339	1.496	1.969	20	M12 x 35	91	M14	17180	82466	23060	8
B402507	5 7/16	7.480	1.339	1.496	1.969	22	M12 x 35	91	M14	20552	90712	24031	9
T402508	5 1/2	7.492	1.339	1.496	1.969	22	M12 x 35	91	M14	20788	90712	23993	8
B402600	6	8.268	1.339	1.496	1.969	26	M12 x 35	91	M14	26801	107205	25695	10
T402607	6 7/16	8.858	1.496	1.732	2.283	22	M14 x 40	138	M16	31764	118419	23702	14
B402608	6 1/2	8.858	1.496	1.732	2.283	22	M14 x 40	138	M16	32072	118419	23702	13
B402615	6 15/16	9.252	1.496	1.732	2.283	24	M14 x 40	138	M16	37343	129185	24757	14
B402700	7	9.252	1.496	1.732	2.283	24	M14 x 40	138	M16	37679	129185	24757	14
T402708	7 1/2	9.823	1.811	2.047	2.598	28	M14 x 45	138	M16	47099	150716	22473	18
T402714	7 7/8	10.236	1.811	2.047	2.598	30	M14 x 45	138	M16	52986	161481	23106	19
T402715	7 15/16	10.504	1.811	2.047	2.598	30	M14 x 45	138	M16	53407	161481	22517	19
T402800	8	10.504	1.811	2.047	2.598	30	M14 x 45	138	M16	53827	161481	22517	19

TOLERANCE (T_L)

Bore diameter machined to D -0/+T_L
T_L = .05mm for bores up to 50mm
.08mm for bores up to 120mm
.10mm for bores up to 235mm
.13mm for bores up to 375mm
.15mm for bores over 375mm

d = Shaft diameter machined to d +0/-T_L

B400 — Metric

Part Number	d (mm)	D (mm)	L (mm)	L_1 (mm)	L_S (mm)	Locking Screws Qty	Locking Screws Size	M_a Install Torque (Nm)	d_B	M_t Maximum Transmitted Torque (Nm)	Th Maximum Transmitted Thrust (N)	P_h Hub Pressure (N/mm^2)	Shipping Weight (kg)
T401018	18	47	17	20	26	8	M6 x 18	15	M8	302	33561	111	0.2
T401019	19	47	17	20	26	8	M6 x 18	15	M8	319	33561	111	0.2
B401020	20	47	17	20	26	8	M6 x 18	15	M8	335	33561	111	0.2
T401022	22	47	17	20	26	8	M6 x 18	15	M8	369	33561	111	0.2
B401024	24	50	17	20	26	9	M6 x 18	15	M8	453	37756	118	0.2
B401025	25	50	17	20	26	9	M6 x 18	15	M8	472	37756	118	0.2
B401028	28	55	17	20	26	10	M6 x 18	15	M8	587	41952	119	0.3
B401030	30	55	17	20	26	10	M6 x 18	15	M8	629	41952	119	0.3
B401032	32	60	17	20	26	12	M6 x 18	15	M8	806	50342	131	0.3
B401035	35	60	17	20	26	12	M6 x 18	15	M8	881	50342	131	0.3
B401038	38	65	17	20	26	14	M6 x 18	15	M8	1116	58732	141	0.3
B401040	40	65	17	20	26	14	M6 x 18	15	M8	1175	58732	141	0.3
B401042	42	75	20	24	32	12	M8 x 22	35	M10	1892	90071	159	0.6
B401045	45	75	20	24	32	12	M8 x 22	35	M10	2027	90071	159	0.5
T401048	48	80	20	24	32	12	M8 x 22	35	M10	2162	90071	149	0.6
B401050	50	80	20	24	32	12	M8 x 22	35	M10	2252	90071	149	0.6
B401055	55	85	20	24	32	14	M8 x 22	35	M10	2889	105083	164	0.6
B401060	60	90	20	24	32	14	M8 x 22	35	M10	3152	105083	155	0.7
B401065	65	95	20	24	32	16	M8 x 22	35	M10	3903	120095	168	0.7
B401070	70	110	24	28	38	14	M10 x 25	69	M12	5880	167988	169	1.2
B401075	75	115	24	28	38	14	M10 x 25	69	M12	6300	167988	161	1.3
B401080	80	120	24	28	38	14	M10 x 25	69	M12	6720	167988	155	1.4
T401085	85	125	24	28	38	16	M10 x 25	69	M12	8158	191986	170	1.4
B401090	90	130	24	28	38	16	M10 x 25	69	M12	8639	191986	163	1.5
B401095	95	135	24	28	38	18	M10 x 25	69	M12	10259	215984	177	1.6
B401100	100	145	26	33	45	14	M12 x 30	123	M14	12800	255998	180	2
B401110	110	155	26	33	45	14	M12 x 30	123	M14	14081	255998	169	2
B401120	120	165	26	33	45	16	M12 x 30	123	M14	17553	292569	181	3
B401130	130	180	34	38	50	20	M12 x 35	123	M14	23771	365712	159	4
B401140	140	190	34	38	50	22	M12 x 35	123	M14	28161	402283	165	4
T401150	150	200	34	38	50	24	M12 x 35	123	M14	32917	438854	171	4
B401160	160	210	34	38	50	26	M12 x 35	123	M14	38033	475425	177	4
B401170	170	225	38	44	58	22	M14 x 40	187	M16	44752	526487	163	6
B401180	180	235	38	44	58	24	M14 x 40	187	M16	51694	574350	171	6
B401190	190	250	46	52	66	28	M14 x 45	187	M16	63654	670075	155	8
B401200	200	260	46	52	66	30	M14 x 45	187	M16	71794	717937	159	9
B401220	220	285	50	56	72	26	M16 x 50	290	M20	93540	850401	158	11
B401240	240	305	50	56	72	30	M16 x 50	290	M20	117750	981232	171	12
B401260	260	325	50	56	72	34	M16 x 50	290	M20	144565	1112063	182	13
T401280	280	355	60	66	84	32	M18 x 60	397	M22	178059	1271808	158	19
T401300	300	375	60	66	84	36	M18 x 60	397	M22	214617	1430784	169	21
T401320	320	405	72	78	98	36	M20 x 70	569	M24	295337	1845919	168	29
T401340	340	425	72	78	98	36	M20 x 70	569	M24	313810	1845919	160	31
T401360	360	455	84	90	112	36	M22 x 80	766	M27	410431	2280208	158	43
T401380	380	475	84	90	112	36	M22 x 80	766	M27	433250	2280208	152	45
T401400	400	495	84	90	112	36	M22 x 80	766	M27	456041	2280208	145	47
T401420	420	515	84	90	112	40	M22 x 80	766	M27	532035	2533564	155	49
T401440	440	545	96	102	126	40	M24 x 90	983	M30	651795	2962675	150	65
T401460	460	565	96	102	126	40	M24 x 90	983	M30	681406	2962675	145	67
T401480	480	585	96	102	126	42	M24 x 90	983	M30	746608	3110809	147	71
T401500	500	605	96	102	126	44	M24 x 90	983	M30	814734	3258942	149	72

B400 — Pilot Bushings

B-LOC pilot bushings: for series B400 Keyless Bushings to provide pre-centering in applications with either straight through hub bores or narrow hubs. Pilot bushings are supplied in sets consisting of three (3) bushings and three (3) longer screws (replacing plated locking screws). For more information refer to www.fennerdrives.com or contact Applications Engineering at 1-800-243-3374.

Recommended pre-centering length in installations without pilot bushings. Provide a minimum .001" clearance (hub concentricity depends on fit clearance).

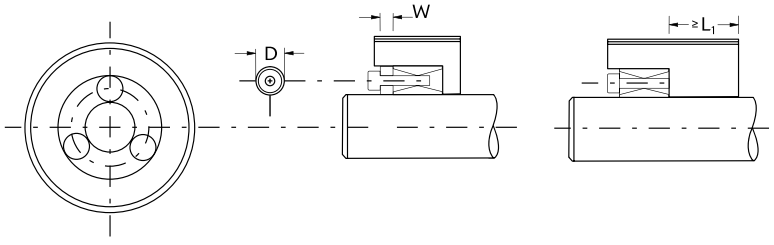

DESIGN FEATURES

External locking devices for keyless frictional shaft/hub connections on shafts from 5/8" to 40" diameter, B-LOC Shrink Discs…

- Provide a high capacity interference fit with all the positive features of conventional interference fits, but without their assembly and disassembly problems.
- Offer extremely concentric and well-balanced connections, ideal for high-speed applications.
- Permit simple axial positioning and angular timing.
- Are available in standard, light, and heavy-duty series to suit any application.

WORKING PRINCIPLE

B-LOC Shrink Discs provide a high-ratio conversion of screw clamp loads into radial contact pressures when the tapered collars are pulled together by tightening of the integrated high-strength locking screws. These radial contact pressures in turn accomplish the following:

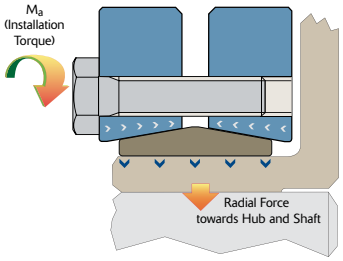

1. Contract the inner ring and hub to close the clearance between shaft and hub bore.

2. Generate a defined shaft/hub contact pressure for a high capacity mechanical interference fit.

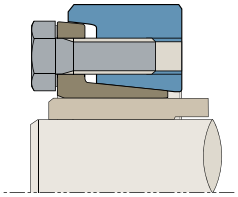

This frictional bond transmits torque, bending and/or thrust loads directly from the hub to the shaft; the shrink disc itself does not carry any torque or thrust load.

TORQUE

M_t = rated torque capacity of one B-LOC Shrink Disc with all screws tightened to specified torque M_a as listed in specifications, based on a coefficient of friction $\mu = 0.15$ and specified tolerances and clearances. Torque capacities for Half Shrink Discs = $\frac{M_t}{2}$

- Torque capacities for connections using shaft diameters between the minimum and maximum sizes listed can be approximated through interpolation.
- Transmissible torque decreases if tolerances and/or clearances are larger than specified; or if hollow shafts with bores exceeding approximately 35% of shaft diameter are used.

THRUST

T_h = transmissible thrust, determined by using the following equation:

$$T_h = \frac{2 \times M_t}{d}$$

where: d = shaft diameter
M_t = rated torque capacity

TORQUE AND THRUST COMBINED

Simultaneous transmission of torque and thrust requires calculating a resultant torque:

$$M_{tres} = \sqrt{T^2 + \left(\frac{F \times d}{2}\right)^2}$$

where: T = peak drive torque
F = peak thrust load
d = shaft diameter

Select a unit where $M_t \geq M_{tres}$

BENDING MOMENTS

Shrink discs will generally transmit a continuous bending moment equal to 25% of rated torque capacity M_t.

RELEASABILITY

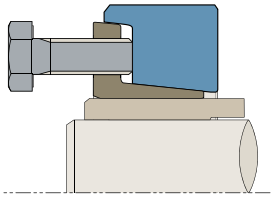

Since the tapers of a B-LOC Shrink Disc are self-releasing and stresses from radial contractions of the hub are well within elastic limits, loosening the locking screws results in hub expansion back to its original dimensions, thereby restoring fit clearance for simple disassembly. The SD40 is manufactured with self-releasing tapers, however, it is possible the outer ring may need disengaging from the inner ring. This can be easily done by loosening the bolts in sequence, transferring the appropriate number of bolts over to the threaded back-off holes in the face of the shrink disc and progressively tightening these bolts until the shrink disc becomes loose. The hub and shaft will return to their original fit clearances.

MATERIAL

Shrink disc inner rings are manufactured from high-carbon steel. Outer rings are made from forged and heat treated alloy steel.

LUBRICANTS

Shrink discs are supplied with Molybdenum Disulphide based lubricant applied to the tapers and to the locking screw threads and head contact areas.

SHAFT AND HUB MATERIAL

Listed specifications assume shaft and hub material with a yield point of at least 45 ksi (310 N/mm^2). Cast iron hubs are well suited for compressive stresses exerted by B-LOC Shrink Discs. However, a lower torsional hub strength generally requires the selection of a shrink disc at least one size larger than listed if full torque (i.e., that applicable to a steel hub) is to be transmitted.

LENGTH OF FIT

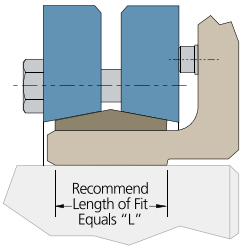

The most recent research on length of fit for a shrink disc connection* indicates that the hub bore-to-shaft interface should be relieved using a non-toleranced clearance except for that portion directly under the shrink disc inner ring, for a fit length equal to "L" for a standard shrink disc (see illustration at right). This approach eliminates fretting corrosion between shaft and hub which can make the separation of components difficult.

*(see Casper, Thomas: Reibkorrosionsverhalten von Spanelementverbindungen - Aachen: Mainz, 1999)

LOCATING AGAINST HUB FACE

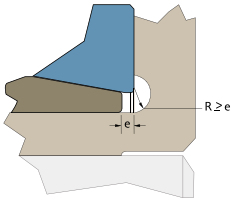

In applications subjected to reversing bending moments, we recommend the configuration at right which requires a hub undercut where R ≥ e for smooth transition.



Metric hex head locking screws DIN 931 grade 10.9 (See M_a for install torque).

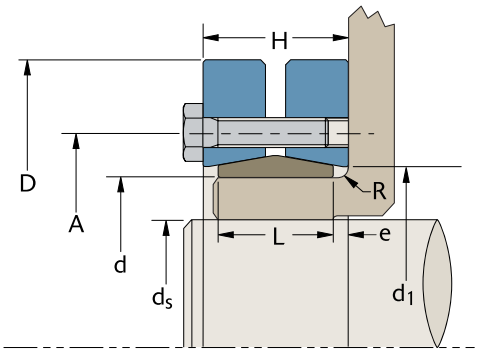

Note: See Table 1 below for maximum diametrical clearance between shaft and hub bore.

SD10 — Standard Duty

Part Number	Size	SD bore (Hub OD) d (inch)	Hub OD Tolerance T_Ld (inch)	Shaft Diameter Range ds-MIN (inch)	Shaft Diameter Range ds-MAX (inch)	Locking Screws Qty	Locking Screws Size	M_a Install Torque (ft lb)	M_t Max. Transmitted Torque ds-MIN (ft lb)	M_t Max. Transmitted Torque ds-MAX (ft lb)	A (inch)	D (inch)	L (inch)	H (inch)	e (inch)	d_1 (inch)	R (inch)	Ship wt (lb)
B0241	24-10	0.945	+ 0 / -0.002	5/8	0.774	6	M5 x 16	3.6	138	278	1.417	1.97	0.551	0.71	0.080	1.023	1/16	0.5
B0301	30-10	1.181	+ 0 / -0.002	3/4	0.967	7	M5 x 18	3.6	177	407	1.732	2.36	0.629	0.79	0.081	1.259	1/16	0.7
B0361	36-10	1.417	+ 0 / -0.002	7/8	1.161	5	M6 x 20	8.7	315	666	2.047	2.83	0.700	0.87	0.085	1.496	1/16	0.9
B0441	44-10	1.732	+ 0 / -0.002	1 1/8	1.419	7	M6 x 20	8.7	683	1198	2.402	3.15	0.787	0.94	0.077	1.850	1/16	1.4
B0501	50-10	1.969	+ 0 / -0.002	1 3/8	1.612	8	M6 x 22	8.7	964	1565	2.756	3.54	0.866	1.02	0.077	2.086	1/16	1.8
B0551	55-10	2.165	+ 0 / -0.002	1 1/2	1.773	8	M6 x 25	8.7	1014	1707	2.953	3.94	0.905	1.14	0.118	2.283	3/32	2.4
B0621	62-10	2.441	+ 0 / -0.002	1 3/4	1.999	10	M6 x 25	8.7	1718	2375	3.386	4.33	0.905	1.14	0.118	2.598	3/32	2.9
B0681	68-10	2.677	+ 0 / -0.002	1 7/8	2.193	10	M6 x 25	8.7	1760	2606	3.386	4.53	0.905	1.14	0.118	2.834	3/32	3
B0751	75-10	2.953	+ 0 / -0.002	2 1/8	2.418	7	M8 x 25	22	2792	4057	3.937	5.43	0.984	1.22	0.118	3.110	1/8	3.8
B0801	80-10	3.150	+ 0 / -0.002	2 3/8	2.580	7	M8 x 25	22	3416	4331	3.937	5.71	0.984	1.22	0.118	3.307	1/8	4.2
B0901	90-10	3.543	+ 0 / -0.004	2 1/2	2.902	10	M8 x 30	22	4751	7139	4.488	6.10	1.181	1.49	0.155	3.700	1/8	7
H0951	95-10	3.740	+ 0 / -0.004	2 3/4	3.063	12	M8 x 30	22	6832	9108	4.882	6.69	1.338	1.69	0.176	4.094	1/8	10
B1001	100-10	3.937	+ 0 / -0.004	2 7/8	3.224	12	M8 x 35	22	7059	9586	4.882	6.69	1.338	1.69	0.176	4.094	1/8	10
B1101	110-10	4.331	+ 0 / -0.004	3 1/8	3.547	9	M10 x 40	44	9013	12602	5.354	7.28	1.535	1.93	0.198	4.488	1/8	13
B1251	125-10	4.921	+ 0 / -0.004	3 1/2	4.031	12	M10 x 40	44	13710	19540	6.299	8.46	1.653	2.04	0.194	5.275	1/8	18
B1401	140-10	5.512	+ 0 / -0.004	4	4.514	10	M12 x 45	74	19648	26440	6.890	9.06	1.811	2.28	0.235	5.708	3/16	23
B1551	155-10	6.102	+ 0 / -0.004	4 1/2	4.998	12	M12 x 50	74	27515	34049	7.559	10.36	1.968	2.44	0.236	6.496	3/16	31
H1651	165-10	6.496	+ 0 / -0.004	4 7/8	5.320	8	M16 x 55	185	37737	47135	8.268	11.42	2.204	2.67	0.233	6.889	3/16	49
B1751	175-10	6.890	+ 0 / -0.004	5 1/4	5.643	8	M16 x 55	185	41620	50005	8.661	11.81	2.204	2.67	0.233	7.283	3/16	50
B1851	185-10	7.283	+ 0 / -0.004	5 5/8	5.965	10	M16 x 65	185	56802	65965	9.291	12.99	2.795	3.34	0.273	7.677	3/16	82
H1951	195-10	7.677	+ 0 / -0.004	5 7/8	6.288	12	M16 x 65	185	71908	84926	9.685	13.78	2.795	3.34	0.273	8.110	3/16	91
B2001	200-10	7.874	+ 0 / -0.004	6 1/4	6.449	12	M16 x 65	185	80674	87096	9.685	13.78	2.795	3.34	0.273	8.110	3/16	90
B2201	220-10	8.661	+ 0 / -0.004	6 3/8	7.094	15	M16 x 80	185	92230	116425	10.630	14.57	3.464	4.06	0.298	8.897	1/4	119
B2401	240-10	9.449	+ 0 / -0.004	7	7.739	12	M20 x 80	362	130645	161818	11.614	15.95	3.622	4.22	0.299	9.763	1/4	148
B2601	260-10	10.236	+ 0 / -0.004	7 5/8	8.383	14	M20 x 90	362	162198	205263	12.638	16.93	4.055	4.69	0.318	10.511	1/4	181
H2801	280-10	11.024	+ 0 / -0.005	8 3/8	9.028	16	M20 x 100	362	210581	253378	13.622	18.11	4.488	5.20	0.356	11.338	5/16	225
H3001	300-10	11.811	+ 0 / -0.005	9	9.673	18	M20 x 100	362	257278	306749	14.331	19.10	4.803	5.52	0.359	12.125	5/16	260
H3201	320-10	12.598	+ 0 / -0.005	9 5/8	10.318	20	M20 x 100	362	310492	359728	15.197	20.48	4.803	5.52	0.359	12.913	5/16	288
H3401	340-10	13.386	+ 0 / -0.005	10 1/4	10.963	24	M20 x 110	362	392088	462391	16.063	22.44	5.276	6.14	0.432	13.700	5/16	409
H3501	350-10	13.780	+ 0 / -0.005	10 7/8	11.285	24	M20 x 110	362	432685	474097	17.008	22.84	5.511	6.30	0.395	14.488	5/16	429
H3601	360-10	14.173	+ 0 / -0.005	11 1/4	11.608	24	M20 x 110	362	451405	487702	17.008	23.23	5.511	6.30	0.395	14.488	5/16	449
H3801	380-10	14.961	+ 0 / -0.005	11 1/2	12.253	20	M24 x 120	620	535005	623051	18.031	25.40	5.669	6.46	0.396	15.276	5/16	526
H3901	390-10	15.354	+ 0 / -0.005	12 1/4	12.575	21	M24 x 120	620	633184	673847	18.425	25.99	5.669	6.46	0.396	15.629	3/8	572
H4201	420-10	16.535	+ 0 / -0.006	12 1/2	13.543	24	M24 x 130	620	685493	829666	19.843	27.17	6.456	7.25	0.397	16.929	3/8	630
H4401	440-10	17.323	+ 0 / -0.006	13 1/2	14.187	24	M24 x 130	620	768743	852536	20.748	29.53	6.969	7.95	0.395	17.716	3/8	835
H4601	460-10	18.110	+ 0 / -0.006	14 1/8	14.832	28	M24 x 130	620	934194	1051580	21.535	30.32	6.969	7.95	0.395	18.425	3/8	924
H4801	480-10	18.898	+ 0 / -0.006	14 3/4	15.477	30	M24 x 150	620	1047086	1176357	22.441	31.50	7.401	8.39	0.495	19.291	1/2	1110
H5001	500-10	19.685	+ 0 / -0.006	15 3/8	16.122	24	M27 x 150	922	1169590	1310148	23.228	33.46	7.401	8.39	0.495	19.999	1/2	1265

Notes:
1. Inner rings of all shrink discs are supplied with one lengthwise slit.
2. Shrink discs are available for shafts up to 40" diameter and in a variety of special designs.
3. Maximum shaft sizes listed for Shrink Disc Series SD10 and SD30 reflect equal section moduli of shaft and hub (maximum shaft diameter = $\frac{d}{1.221}$).

NOTE: Larger shrink discs for shafts up to 40" diameter are available on request.

Shaft Sizes (inch) >	Shaft Sizes (inch) ≤	Maximum Diametrical Clearance Between Shaft and Hub Bore
	1 1/8	0.0010
1 1/8	1 15/16	0.0015
1 15/16	4 3/4	0.0020
4 3/4	7	0.0030
7	10	0.0040
10	14	0.0050
14		0.0060

Table 1
For Series SD10, SD20 and SD30

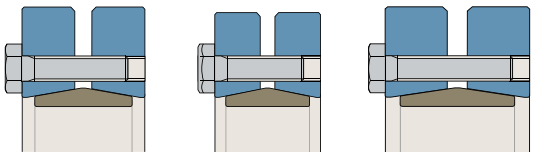

SD10
Standard Duty

SD20
Light Duty

SD30
Heavy Duty

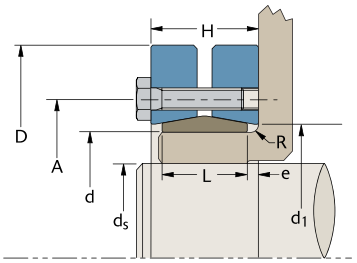

SD20 — Light Duty

Part Number	Size	SD bore (Hub OD) d (inch)	Hub OD Tolerance T_1d (inch)	Shaft Diameter Range ds-MIN (inch)	Shaft Diameter Range ds-MAX (inch)	Locking Screws Qty	Locking Screws Size	M_a Install Torque (ft lb)	M_t Max. Transmitted Torque ds-MIN (ft lb)	M_t Max. Transmitted Torque ds-MAX (ft lb)	A (inch)	D (inch)	L (inch)	H (inch)	e (inch)	d_1 (inch)	R (inch)	Ship wt (lb)
H1252	125-20	4.921	+ 0 / -0.004	3 5/8	4.125	8	M10 x 40	44	9380	13343	6.220	7.28	1.535	2.01	0.258	5.118	1/8	13
H1402	140-20	5.512	+ 0 / -0.004	4 1/4	5.000	9	M10 x 40	44	13691	20328	6.889	8.67	1.535	2.01	0.258	5.669	1/8	18
H1552	155-20	6.102	+ 0 / -0.004	5	5.500	11	M10 x 40	44	21144	27447	7.559	9.65	1.535	2.01	0.258	6.259	1/8	22
H1652	165-20	6.496	+ 0 / -0.004	5 3/8	5.750	10	M12 x 50	74	30652	36677	8.267	10.24	1.811	2.44	0.315	6.653	3/16	31
H1752	175-20	6.890	+ 0 / -0.004	5 5/8	6.125	11	M12 x 50	74	34940	43588	8.661	10.83	1.811	2.44	0.315	7.047	3/16	35
H1852	185-20	7.283	+ 0 / -0.004	6	6.500	12	M12 x 50	74	41643	51035	8.858	11.62	1.811	2.44	0.315	7.440	3/16	44
H1952	195-20	7.677	+ 0 / -0.004	6 1/2	7.000	15	M12 x 60	74	58979	71073	9.330	12.40	2.204	2.84	0.318	7.834	3/16	60
H2202	220-20	8.661	+ 0 / -0.004	7	7.875	10	M16 x 70	185	76454	100895	10.433	13.59	2.204	3.31	0.356	8.818	3/16	77
H2402	240-20	9.449	+ 0 / -0.004	7 7/8	8.500	12	M16 x 70	185	107011	129864	11.417	14.57	2.598	3.31	0.356	9.606	1/4	97
H2602	260-20	10.236	+ 0 / -0.004	8 5/8	9.250	14	M16 x 70	185	139939	166618	12.204	15.55	2.834	3.63	0.398	10.433	1/4	106
H2802	280-20	11.024	+ 0 / -0.005	9	9.875	16	M16 x 75	185	158724	200396	13.110	16.74	3.307	4.10	0.397	11.220	1/4	132
H3002	300-20	11.811	+ 0 / -0.005	9 7/8	10.625	20	M16 x 75	185	229935	271288	14.094	19.49	3.307	4.17	0.397	12.007	1/4	165
H3202	320-20	12.598	+ 0 / -0.005	10 1/2	11.375	20	M16 x 75	185	238939	292045	14.881	19.49	3.307	4.18	0.437	12.795	1/4	185
H3402	340-20	13.386	+ 0 / -0.005	11 3/8	12.000	21	M16 x 75	185	281000	320857	15.826	21.07	3.307	4.18	0.437	13.582	1/4	220
H3602	360-20	14.173	+ 0 / -0.005	11 7/8	12.625	16	M20 x 90	362	341876	398029	16.653	21.85	3.937	4.81	0.437	14.370	5/16	275
H3802	380-20	14.961	+ 0 / -0.005	12 1/2	13.000	18	M20 x 100	362	403340	444630	17.401	23.03	4.409	5.35	0.471	15.236	5/16	301
H3902	390-20	15.354	+ 0 / -0.005	12 5/8	13.750	20	M20 x 100	362	446171	549086	17.795	23.43	4.409	5.36	0.476	15.629	5/16	344
H4202	420-20	16.535	+ 0 / -0.006	13 3/4	14.625	22	M20 x 100	362	544495	625817	19.094	24.81	4.724	5.67	0.473	16.810	5/16	407
H4602	460-20	18.110	+ 0 / -0.006	14 5/8	16.375	28	M20 x 110	362	704454	927856	20.747	26.97	5.196	6.22	0.512	18.425	3/8	517
H5002	500-20	19.685	+ 0 / -0.006	16 1/4	17.375	30	M20 x 120	362	860127	1014952	22.519	29.53	5.984	7.01	0.513	19.999	3/8	704

SD30 — Heavy Duty

Part Number	Size	SD bore (Hub OD) d (inch)	Hub OD Tolerance T_1d (inch)	Shaft Diameter Range ds-MIN (inch)	Shaft Diameter Range ds-MAX (inch)	Locking Screws Qty	Locking Screws Size	M_a Install Torque (ft lb)	M_t Max. Transmitted Torque ds-MIN (ft lb)	M_t Max. Transmitted Torque ds-MAX (ft lb)	A (inch)	D (inch)	L (inch)	H (inch)	e (inch)	d_1 (inch)	R (inch)	Ship wt (lb)
H0443	44-30	1.732	+ 0 / -0.002	1 1/8	1.419	5	M8 x 30	22	941	1653	2.598	3.35	1.102	1.34	0.119	1.890	1/16	1.4
H0503	50-30	1.969	+ 0 / -0.002	1 3/8	1.612	7	M8 x 35	22	1761	2749	2.874	3.74	1.181	1.54	0.177	2.126	1/16	1.8
H0553	55-30	2.165	+ 0 / -0.002	1 1/2	1.773	7	M8 x 35	22	1892	3023	3.071	4.13	1.181	1.54	0.177	2.323	3/32	2.4
B0623	62-30	2.441	+ 0 / -0.002	1 3/4	1.999	7	M8 x 35	22	2353	3244	3.346	4.53	1.181	1.54	0.177	2.598	3/32	2.9
B0683	68-30	2.677	+ 0 / -0.002	1 7/8	2.193	8	M8 x 35	22	2861	4173	3.622	4.72	1.181	1.54	0.177	2.835	3/32	3
B0753	75-30	2.953	+ 0 / -0.002	2 1/8	2.418	7	M10 x 40	44	4552	6529	4.134	5.71	1.417	1.81	0.197	3.307	1/8	3.8
B0803	80-30	3.150	+ 0 / -0.002	2 3/8	2.580	7	M10 x 40	44	5541	6971	4.134	5.71	1.417	1.81	0.197	3.307	1/8	4.2
B0903	90-30	3.543	+ 0 / -0.004	2 1/2	2.902	8	M10 x 40	44	5946	8994	4.567	6.30	1.575	1.97	0.197	3.701	1/8	7
B1003	100-30	3.937	+ 0 / -0.004	2 7/8	3.224	10	M10 x 45	44	9370	12700	4.961	6.69	1.732	2.13	0.197	4.094	1/8	10
H1103	110-30	4.331	+ 0 / -0.004	3 1/8	3.547	12	M10 x 45	44	12116	16879	5.354	7.28	1.969	2.36	0.196	4.482	1/8	17
H1253	125-30	4.921	+ 0 / -0.004	3 1/2	4.031	12	M12 x 50	74	20092	28393	6.299	8.47	2.126	2.60	0.237	5.157	3/16	24
B1403	140-30	5.512	+ 0 / -0.004	4	4.514	12	M12 x 60	74	23275	31491	6.889	9.06	2.362	2.92	0.279	5.744	3/16	29
H1553	155-30	6.102	+ 0 / -0.004	4 1/2	4.998	15	M12 x 60	74	34154	42273	7.795	10.36	2.598	3.15	0.276	6.496	3/16	44
H1653	165-30	6.496	+ 0 / -0.004	4 7/8	5.320	10	M16 x 70	185	46957	58743	8.267	11.42	2.834	3.47	0.318	6.940	3/16	57
H1753	175-30	6.890	+ 0 / -0.004	5 1/4	5.643	10	M16 x 70	185	51804	62320	8.661	11.82	2.834	3.47	0.318	7.322	3/16	64
H1853	185-30	7.283	+ 0 / -0.004	5 5/8	5.965	15	M16 x 80	185	86847	100371	9.291	12.99	3.622	4.41	0.394	7.704	3/16	104
H1953	195-30	7.677	+ 0 / -0.004	5 7/8	6.288	15	M16 x 80	185	89488	105820	9.685	13.78	3.622	4.41	0.394	8.102	1/4	110
H2003	200-30	7.874	+ 0 / -0.004	6 1/4	6.449	15	M16 x 80	185	100466	108524	9.685	13.78	3.622	4.41	0.394	8.102	1/4	110
H2203	220-30	8.661	+ 0 / -0.004	6 3/8	7.094	20	M16 x 90	185	123458	155750	10.629	14.57	4.488	5.28	0.396	8.901	1/4	143
B2403	240-30	9.449	+ 0 / -0.004	7	7.739	15	M20 x 100	362	162518	201425	11.614	15.95	4.724	5.67	0.473	9.692	1/4	192
H2603	260-30	10.236	+ 0 / -0.005	7 5/8	8.383	18	M20 x 110	362	207733	263252	12.637	16.93	5.354	6.30	0.473	10.511	1/4	220
H2803	280-30	11.024	+ 0 / -0.005	8 3/8	9.028	21	M20 x 120	362	276822	332933	13.622	18.11	5.826	6.77	0.472	11.370	5/16	291
H3003	300-30	11.811	+ 0 / -0.005	9	9.673	22	M20 x 120	362	313789	374371	14.330	19.10	5.984	6.93	0.473	12.177	5/16	308
H3203	320-30	12.598	+ 0 / -0.005	9 5/8	10.318	24	M20 x 120	362	368957	427823	15.196	20.48	6.299	7.25	0.476	12.964	5/16	363
H3403	340-30	13.386	+ 0 / -0.005	10 1/4	10.963	21	M24 x 130	620	489329	577963	16.535	22.44	6.929	7.88	0.476	13.724	5/16	528
H3603	360-30	14.173	+ 0 / -0.005	11	11.608	22	M24 x 140	620	562859	642534	17.007	23.23	7.086	8.04	0.477	14.515	3/8	550
H3903	390-30	15.354	+ 0 / -0.005	11 5/8	12.575	24	M24 x 140	620	628949	762028	18.425	25.99	7.401	8.35	0.475	15.787	3/8	770
H4203	420-30	16.535	+ 0 / -0.006	12 1/2	13.543	30	M24 x 160	620	852841	1033732	19.842	27.17	8.425	9.37	0.472	16.811	3/8	902
H4603	460-30	18.110	+ 0 / -0.006	13 5/8	14.832	28	M27 x 170	922	1144559	1403894	21.535	30.32	8.818	9.93	0.556	18.503	1/2	1188
H5003	500-30	19.685	+ 0 / -0.006	14 7/8	16.122	32	M27 x 180	922	1443359	1749331	23.622	33.47	9.685	10.79	0.552	19.999	1/2	1650

Notes:
1. Inner rings of all shrink discs are supplied with one lengthwise slit.
2. Shrink discs are available for shafts up to 40" diameter and in a variety of special designs.
3. Maximum shaft sizes listed for Shrink Disc Series SD10 and SD30 reflect equal section moduli of shaft and hub (maximum shaft diameter = $\frac{d}{1.221}$).
4. See Table 1 (bottom of page 43) for maximum diametrical clearance between shaft and hub bore.

B-LOC® Split and Half Shrink Discs

To complement our standard line of B-LOC Shrink Discs, we also offer Split and Half Shrink Discs. These versions are available in all bore sizes listed for standard Shrink Discs. The Split Shrink Disc design allows greater mounting versatility on symmetrical hubs. For applications with tight space constraints and lower performance requirements, Half Shrink Discs provide several compact mounting options.

- **Reduced dimensions –** Perfect for applications with restricted space.
- **Easy Installation –** Standard screws mean installation and removal are achieved using standard tools.
- **Infinite Adjustment –** Simplified design allows hubs to be located and locked virtually anywhere on the shaft.
- **Easy Removal –** Units are self-releasing once the locking screws are loosened, making removal a breeze.
- **Reliability you can count on!** B-LOC Shrink Discs can be tightened and released as often as required.

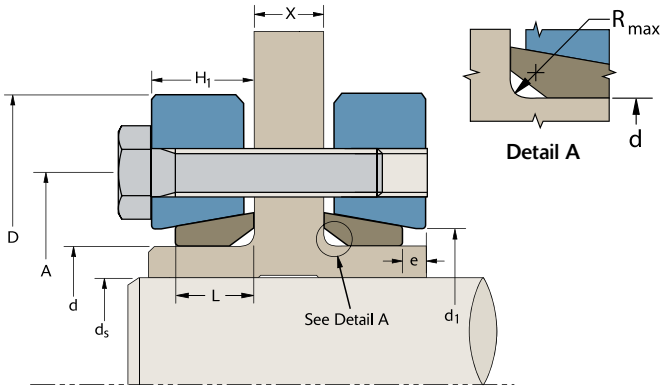

Split Shrink Disc
Type HS

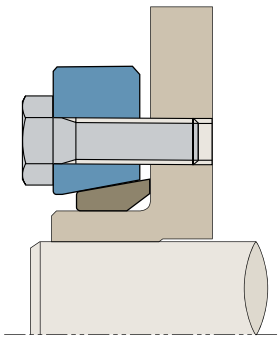

Half Shrink Disc
Type HC
(Tapped holes in hub)

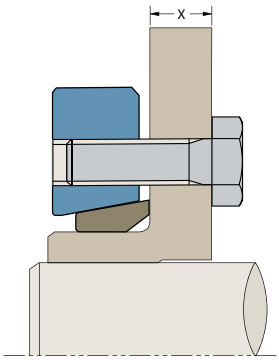

Half Shrink Disc
Type HT
(Clearance holes in hub)

Note: Dimension X is required when ordering Split or Half Shrink Disc Type HT. See Table 1 at bottom left of page 46 for web clearance hole data. Please consult B-LOC Applications Engineering at +1-800-243-3374 or ae@fennerdrives.com to determine appropriate screw length for your specific application.

Split Shrink Discs

Standard and Light Duty Series: If dimension X > 2 × L then the transmissible torque may be reduced by up to 50%.

Heavy Duty Series: If dimension X > 1 × L then the transmissible torque may be reduced by up to 50%.

Half Shrink Discs

Half Shrink Discs HC/HT transmit 50% of the M_t of Shrink Discs and Split Shrink Discs.

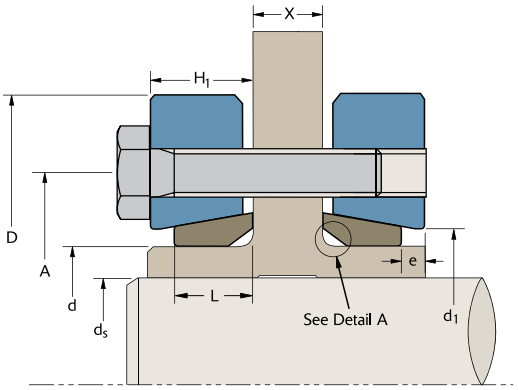

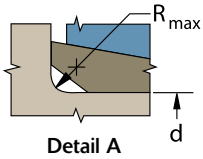

Split Shrink Disc – Type HS

Note: Dimension X is required when ordering Split Shrink Discs. See Table 1 at bottom left for web clearance hole data.

SD10 — Split SD — Standard Duty

Part Number	Size	SD bore (Hub OD) d (inch)	Hub OD Tolerance T_Ld (inch)	Shaft Diameter Range ds-MIN (inch)	Shaft Diameter Range ds-MAX (inch)	Locking Screws Qty	Locking Screws Size	M_a Install Torque (ft lb)	M_t Max. Transmitted Torque ds-MIN (ft lb)	M_t Max. Transmitted Torque ds-MAX (ft lb)	A (inch)	D (inch)	L (inch)	H_1 (inch)	e (inch)	d_1 (inch)	R (inch)	Ship wt (lb)
HS0241	24-10	0.945	+ 0 / -0.002	5/8	0.774	6	M5	3.6	138	278	1.417	1.97	0.374	0.454	0.080	1.023	1/16	0.3
HS0301	30-10	1.181	+ 0 / -0.002	3/4	0.967	7	M5	3.6	177	407	1.732	2.36	0.413	0.494	0.081	1.259	1/16	0.4
HS0361	36-10	1.417	+ 0 / -0.002	7/8	1.161	5	M6	8.7	315	666	2.047	2.83	0.448	0.533	0.085	1.496	1/16	0.6
HS0441	44-10	1.732	+ 0 / -0.002	1 1/8	1.419	7	M6	8.7	683	1198	2.402	3.15	0.492	0.569	0.077	1.850	1/16	0.8
HS0501	50-10	1.969	+ 0 / -0.002	1 3/8	1.612	8	M6	8.7	964	1565	2.756	3.54	0.531	0.608	0.077	2.086	1/16	1.0
HS0551	55-10	2.165	+ 0 / -0.002	1 1/2	1.773	8	M6	8.7	1014	1707	2.953	3.94	0.551	0.669	0.118	2.283	3/32	1.4
HS0621	62-10	2.441	+ 0 / -0.002	1 3/4	1.999	10	M6	8.7	1718	2375	3.386	4.33	0.551	0.669	0.118	2.598	3/32	1.6
HS0681	68-10	2.677	+ 0 / -0.002	1 7/8	2.193	10	M6	8.7	1760	2606	3.386	4.53	0.551	0.669	0.118	2.834	3/32	5.9
HS0751	75-10	2.953	+ 0 / -0.002	2 1/8	2.418	7	M8	22	2792	4057	3.937	5.43	0.689	0.807	0.118	3.110	1/8	2.6
HS0801	80-10	3.150	+ 0 / -0.002	2 3/8	2.580	7	M8	22	3416	4331	3.937	5.71	0.689	0.807	0.118	3.307	1/8	2.8
HS0901	90-10	3.543	+ 0 / -0.004	2 1/2	2.902	10	M8	22	4751	7139	4.488	6.10	0.788	0.943	0.155	3.700	1/8	4
HS0951	95-10	3.740	+ 0 / -0.004	2 3/4	3.063	12	M8	22	6832	9108	4.882	6.69	0.866	1.042	0.176	4.094	1/8	6
HS1001	100-10	3.937	+ 0 / -0.004	2 7/8	3.224	12	M8	22	7059	9586	4.882	6.69	0.866	1.042	0.176	4.094	1/8	6
HS1101	110-10	4.331	+ 0 / -0.004	3 1/8	3.547	9	M10	44	9013	12602	5.354	7.28	0.965	1.163	0.198	4.488	1/8	7
HS1251	125-10	4.921	+ 0 / -0.004	3 1/2	4.031	12	M10	44	13710	19540	6.299	8.46	1.024	1.218	0.194	5.275	1/8	11
HS1401	140-10	5.512	+ 0 / -0.004	4	4.514	10	M12	74	19648	26440	6.890	9.06	1.103	1.338	0.235	5.708	3/16	13
HS1551	155-10	6.102	+ 0 / -0.004	4 1/2	4.998	12	M12	74	27515	34049	7.559	10.36	1.181	1.417	0.236	6.496	3/16	17
HS1651	165-10	6.496	+ 0 / -0.004	4 7/8	5.320	8	M16	185	37737	47135	8.268	11.42	1.299	1.532	0.233	6.889	3/16	24
HS1751	175-10	6.890	+ 0 / -0.004	5 1/4	5.643	8	M16	185	41620	50005	8.661	11.81	1.299	1.532	0.233	7.283	3/16	25
HS1851	185-10	7.283	+ 0 / -0.004	5 5/8	5.965	10	M16	185	56802	65965	9.291	12.99	1.595	1.868	0.273	7.677	3/16	39
HS1951	195-10	7.677	+ 0 / -0.004	5 7/8	6.288	12	M16	185	71908	84926	9.685	13.78	1.595	1.868	0.273	8.110	3/16	44
HS2001	200-10	7.874	+ 0 / -0.004	6 1/4	6.449	12	M16	185	80674	87096	9.685	13.78	1.595	1.868	0.273	8.110	3/16	43
HS2201	220-10	8.661	+ 0 / -0.004	6 3/8	7.094	15	M16	185	92230	116425	10.630	14.57	2.027	2.325	0.298	8.897	1/4	57
HS2401	240-10	9.449	+ 0 / -0.004	7	7.739	12	M20	362	130645	161818	11.614	15.95	2.106	2.405	0.299	9.763	1/4	72
HS2601	260-10	10.236	+ 0 / -0.004	7 5/8	8.383	14	M20	362	162198	205263	12.638	16.93	2.323	2.641	0.318	10.511	1/4	89
HS2801	280-10	11.024	+ 0 / -0.005	8 3/8	9.028	16	M20	362	210581	253378	13.622	18.11	2.638	2.994	0.356	11.338	5/16	115
HS3001	300-10	11.811	+ 0 / -0.005	9	9.673	18	M20	362	257278	306749	14.331	19.10	2.796	3.155	0.359	12.125	5/16	133
HS3201	320-10	12.598	+ 0 / -0.005	9 5/8	10.318	20	M20	362	310492	359728	15.197	20.48	2.796	3.155	0.359	12.913	5/16	153
HS3401	340-10	13.386	+ 0 / -0.005	10 1/4	10.963	24	M20	362	392088	462391	16.063	22.44	3.032	3.464	0.432	13.700	5/16	209
HS3501	350-10	13.780	+ 0 / -0.005	10 7/8	11.285	24	M20	362	432685	474097	17.008	22.84	3.150	3.545	0.395	14.488	5/16	220
HS3601	360-10	14.173	+ 0 / -0.005	11 1/4	11.608	24	M20	362	451405	487702	17.008	23.23	3.150	3.545	0.395	14.488	5/16	225
HS3801	380-10	14.961	+ 0 / -0.005	11 1/2	12.253	20	M24	620	535005	623051	18.031	25.40	3.229	3.625	0.396	15.276	5/16	292
HS3901	390-10	15.354	+ 0 / -0.005	12 1/4	12.575	21	M24	620	633184	673847	18.425	25.99	3.327	3.723	0.396	15.629	3/8	305
HS4201	420-10	16.535	+ 0 / -0.006	12 1/2	13.543	24	M24	620	685493	829666	19.843	27.17	3.720	4.117	0.397	16.929	3/8	364
HS4401	440-10	17.323	+ 0 / -0.006	13 1/2	14.187	24	M24	620	768743	852536	20.748	29.53	3.977	4.372	0.395	17.716	3/8	467
HS4601	460-10	18.110	+ 0 / -0.006	14 1/8	14.832	28	M24	620	934194	1051580	21.535	30.32	3.977	4.372	0.395	18.425	3/8	483
HS4801	480-10	18.898	+ 0 / -0.006	14 3/4	15.477	30	M24	620	1047086	1176357	22.441	31.50	4.292	4.787	0.495	19.291	1/2	555
HS5001	500-10	19.685	+ 0 / -0.006	15 3/8	16.122	24	M27	922	1169590	1310148	23.228	33.46	4.292	4.787	0.495	19.999	1/2	626

Specifications for Web Clearance Holes (diameter in inches)									
Screw Size	M5	M6	M8	M10	M12	M16	M20	M24	M27
Split Shrink Disc	0.281	0.328	0.406	0.500	0.594	0.750	0.906	1.063	1.188
Half Shrink Disc HT	0.219	0.266	0.359	0.438	0.531	0.719	0.875	1.031	1.156

Table 1

Notes:
1. Screw length must be determined based on your X dimension. Please consult Applications Engineering.
2. Inner rings of all shrink discs are supplied with one lengthwise slit.
3. Shrink discs are available for shafts up to 40" diameter and in a variety of special designs.
4. Maximum shaft sizes listed for Shrink Disc Series SD10 and SD30 reflect equal section moduli of shaft and hub (maximum shaft diameter = $\frac{d}{1.221}$).

NOTE: Larger shrink discs for shafts up to 40" diameter are available on request.

Shaft Sizes (inch) >	Shaft Sizes (inch) ≤	Maximum Diametrical Clearance Between Shaft and Hub Bore
	1 1/8	0.0010
1 1/8	1 15/16	0.0015
1 15/16	4 3/4	0.0020
4 3/4	7	0.0030
7	10	0.0040
10	14	0.0050
14		0.0060

Table 2
For Series SD10, SD20 and SD30

SD20 — Split SD — Light Duty

Part Number	Size	SD bore (Hub OD) d (inch)	Hub OD Tolerance T_1d (inch)	Shaft Diameter Range ds-MIN (inch)	Shaft Diameter Range ds-MAX (inch)	Locking Screws Qty	Locking Screws Size	M_a Install Torque (ft lb)	M_t Max. Transmitted Torque ds-MIN (ft lb)	M_t Max. Transmitted Torque ds-MAX (ft lb)	A (inch)	D (inch)	L (inch)	H_1 (inch)	e (inch)	d_1 (inch)	R (inch)	Ship wt (lb)
HS1252	125-20	4.921	+ 0 / -0.004	3 5/8	4.125	8	M10	44	9380	13343	6.220	7.28	0.965	1.223	0.258	5.118	1/8	7
HS1402	140-20	5.512	+ 0 / -0.004	4 1/4	5.000	9	M10	44	13691	20328	6.889	8.67	0.965	1.223	0.258	5.669	1/8	10
HS1552	155-20	6.102	+ 0 / -0.004	5	5.500	11	M10	44	21144	27447	7.559	9.65	0.965	1.223	0.258	6.259	1/8	12
HS1652	165-20	6.496	+ 0 / -0.004	5 3/8	5.750	10	M12	74	30652	36677	8.267	10.24	1.103	1.418	0.315	6.653	3/16	16
HS1752	175-20	6.890	+ 0 / -0.004	5 5/8	6.125	11	M12	74	34940	43588	8.661	10.83	1.103	1.418	0.315	7.047	3/16	17
HS1852	185-20	7.283	+ 0 / -0.004	6	6.500	12	M12	74	41643	51035	8.858	11.62	1.103	1.418	0.315	7.440	3/16	20
HS1952	195-20	7.677	+ 0 / -0.004	6 1/2	7.000	15	M12	74	58979	71073	9.330	12.40	1.299	1.617	0.318	7.834	3/16	27
HS2202	220-20	8.661	+ 0 / -0.004	7	7.875	10	M16	185	76454	100895	10.433	13.59	1.299	1.655	0.356	8.818	3/16	37
HS2402	240-20	9.449	+ 0 / -0.004	7 7/8	8.500	12	M16	185	107011	129864	11.417	14.57	1.594	1.950	0.356	9.606	1/4	42
HS2602	260-20	10.236	+ 0 / -0.004	8 5/8	9.250	14	M16	185	139939	166618	12.204	15.55	1.712	2.110	0.398	10.433	1/4	51
HS2802	280-20	11.024	+ 0 / -0.005	9	9.875	16	M16	185	158724	200396	13.110	16.74	1.949	2.346	0.397	11.220	1/4	67
HS3002	300-20	11.811	+ 0 / -0.005	9 7/8	10.625	20	M16	185	229935	271288	14.094	19.49	1.949	2.346	0.397	12.007	1/4	79
HS3202	320-20	12.598	+ 0 / -0.005	10 1/2	11.375	20	M16	185	238939	292045	14.881	19.49	1.949	2.386	0.437	12.795	1/4	96
HS3402	340-20	13.386	+ 0 / -0.005	11 3/8	12.000	21	M16	185	281000	320857	15.826	21.07	1.949	2.386	0.437	13.582	1/4	114
HS3602	360-20	14.173	+ 0 / -0.005	11 7/8	12.625	16	M20	362	341876	398029	16.653	21.85	2.363	2.800	0.437	14.370	5/16	137
HS3802	380-20	14.961	+ 0 / -0.005	12 1/2	13.000	18	M20	362	403340	444630	17.401	23.03	2.599	3.070	0.471	15.236	5/16	168
HS3902	390-20	15.354	+ 0 / -0.005	12 5/8	13.750	20	M20	362	446171	549086	17.795	23.43	2.599	3.075	0.476	15.629	5/16	172
HS4202	420-20	16.535	+ 0 / -0.006	13 3/4	14.625	22	M20	362	544495	625817	19.094	24.81	2.756	3.229	0.473	16.810	5/16	199
HS4602	460-20	18.110	+ 0 / -0.006	14 5/8	16.375	28	M20	362	704454	927856	20.747	26.97	3.090	3.602	0.512	18.425	3/8	257
HS5002	500-20	19.685	+ 0 / -0.006	16 1/4	17.375	30	M20	362	860127	1014952	22.519	29.53	3.484	3.997	0.513	19.999	3/8	350

SD30 — Split SD — Heavy Duty

Part Number	Size	SD bore (Hub OD) d (inch)	Hub OD Tolerance T_1d (inch)	Shaft Diameter Range ds-MIN (inch)	Shaft Diameter Range ds-MAX (inch)	Locking Screws Qty	Locking Screws Size	M_a Install Torque (ft lb)	M_t Max. Transmitted Torque ds-MIN (ft lb)	M_t Max. Transmitted Torque ds-MAX (ft lb)	A (inch)	D (inch)	L (inch)	H_1 (inch)	e (inch)	d_1 (inch)	R (inch)	Ship wt (lb)
HS0443	44-30	1.732	+ 0 / -0.002	1 1/8	1.419	5	M8	22	941	1653	2.598	3.35	0.649	0.768	0.119	1.890	1/16	1.2
HS0503	50-30	1.969	+ 0 / -0.002	1 3/8	1.612	7	M8	22	1761	2749	2.874	3.74	0.689	0.866	0.177	2.126	1/16	1.8
HS0553	55-30	2.165	+ 0 / -0.002	1 1/2	1.773	7	M8	22	1892	3023	3.071	4.13	0.689	0.866	0.177	2.323	3/32	2.1
HS0623	62-30	2.441	+ 0 / -0.002	1 3/4	1.999	7	M8	22	2353	3244	3.346	4.53	0.689	0.866	0.177	2.598	3/32	2.3
HS0683	68-30	2.677	+ 0 / -0.002	1 7/8	2.193	8	M8	22	2861	4173	3.622	4.72	0.689	0.866	0.177	2.835	3/32	2.5
HS0753	75-30	2.953	+ 0 / -0.002	2 1/8	2.418	7	M10	44	4552	6529	4.134	5.71	0.906	1.103	0.197	3.307	1/8	4.6
HS0803	80-30	3.150	+ 0 / -0.002	2 3/8	2.580	7	M10	44	5541	6971	4.134	5.71	0.906	1.103	0.197	3.307	1/8	4.4
HS0903	90-30	3.543	+ 0 / -0.004	2 1/2	2.902	8	M10	44	5946	8994	4.567	6.30	0.985	1.182	0.197	3.701	1/8	6
HS1003	100-30	3.937	+ 0 / -0.004	2 7/8	3.224	10	M10	44	9370	12700	4.961	6.69	1.063	1.260	0.197	4.094	1/8	7
HS1103	110-30	4.331	+ 0 / -0.004	3 1/8	3.547	12	M10	44	12116	16879	5.354	7.28	1.182	1.378	0.196	4.482	1/8	9
HS1253	125-30	4.921	+ 0 / -0.004	3 1/2	4.031	12	M12	74	20092	28393	6.299	8.47	1.260	1.497	0.237	5.157	3/16	13
HS1403	140-30	5.512	+ 0 / -0.004	4	4.514	12	M12	74	23275	31491	6.889	9.06	1.378	1.657	0.279	5.744	3/16	16
HS1553	155-30	6.102	+ 0 / -0.004	4 1/2	4.998	15	M12	74	34154	42273	7.795	10.36	1.496	1.772	0.276	6.496	3/16	23
HS1653	165-30	6.496	+ 0 / -0.004	4 7/8	5.320	10	M16	185	46957	58743	8.267	11.42	1.614	1.932	0.318	6.940	3/16	32
HS1753	175-30	6.890	+ 0 / -0.004	5 1/4	5.643	10	M16	185	51804	62320	8.661	11.82	1.614	1.932	0.318	7.322	3/16	33
HS1853	185-30	7.283	+ 0 / -0.004	5 5/8	5.965	15	M16	185	86847	100371	9.291	12.99	2.008	2.402	0.394	7.704	3/16	53
HS1953	195-30	7.677	+ 0 / -0.004	5 7/8	6.288	15	M16	185	89488	105820	9.685	13.78	2.106	2.500	0.394	8.102	1/4	60
HS2003	200-30	7.874	+ 0 / -0.004	6 1/4	6.449	15	M16	185	100466	108524	9.685	13.78	2.106	2.500	0.394	8.102	1/4	59
HS2203	220-30	8.661	+ 0 / -0.004	6 3/8	7.094	20	M16	185	123458	155750	10.629	14.57	2.539	2.935	0.396	8.901	1/4	76
HS2403	240-30	9.449	+ 0 / -0.004	7	7.739	15	M20	362	162518	201425	11.614	15.95	2.657	3.130	0.473	9.692	1/4	99
HS2603	260-30	10.236	+ 0 / -0.005	7 5/8	8.383	18	M20	362	207733	263252	12.637	16.93	2.972	3.445	0.473	10.511	1/4	121
HS2803	280-30	11.024	+ 0 / -0.005	8 3/8	9.028	21	M20	362	276822	332933	13.622	18.11	3.307	3.779	0.472	11.370	5/16	149
HS3003	300-30	11.811	+ 0 / -0.005	9	9.673	22	M20	362	313789	374371	14.330	19.10	3.386	3.859	0.473	12.177	5/16	165
HS3203	320-30	12.598	+ 0 / -0.005	9 5/8	10.318	24	M20	362	368957	427823	15.196	20.48	3.544	4.020	0.476	12.964	5/16	200
HS3403	340-30	13.386	+ 0 / -0.005	10 1/4	10.963	21	M24	620	489329	577963	16.535	22.44	3.859	4.335	0.476	13.724	5/16	272
HS3603	360-30	14.173	+ 0 / -0.005	11	11.608	22	M24	620	562859	642534	17.007	23.23	4.035	4.512	0.477	14.515	3/8	286
HS3903	390-30	15.354	+ 0 / -0.005	11 5/8	12.575	24	M24	620	628949	762028	18.425	25.99	4.193	4.668	0.475	15.787	3/8	384
HS4203	420-30	16.535	+ 0 / -0.006	12 1/2	13.543	30	M24	620	852841	1033732	19.842	27.17	4.705	5.177	0.472	16.811	3/8	462
HS4603	460-30	18.110	+ 0 / -0.006	13 5/8	14.832	28	M27	922	1144559	1403894	21.535	30.32	5.000	5.556	0.556	18.503	1/2	624
HS5003	500-30	19.685	+ 0 / -0.006	14 7/8	16.122	32	M27	922	1443359	1749331	23.622	33.47	5.434	5.986	0.552	19.999	1/2	838

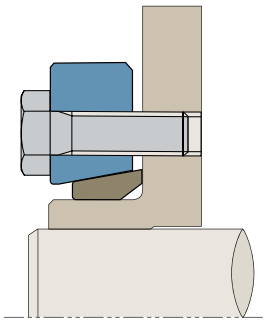

Half Shrink Disc Type HC

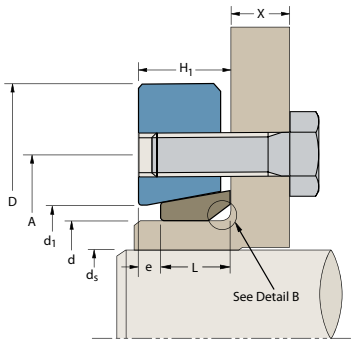

Half Shrink Disc Type HT

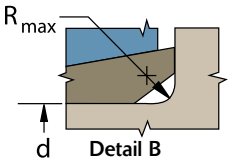

Note: Dimension X is required when ordering Half Shrink Disc Type HT. See Table 1 at bottom left for web clearance hole data.

SD10 — Half SD — Standard Duty

Type HC Part Number	Type HT Part Number	Size	SD bore (Hub OD)	Hub OD Tolerance	Shaft Diameter Range		Locking Screws			M_a	M_t		A	D	L	H_1	e	d_1	R	Ship wt
										Install Torque	Max. Transmitted Torque									
			d	T_Ld	ds-MIN	ds-MAX	Qty	HC Size	HT Size	(ft lb)	ds-MIN (ft lb)	ds-MAX (ft lb)	(inch)	(inch)	(inch)	(inch)	(inch)	(inch)	(inch)	(lb)
HHC0241	HHT0241	24-10	0.945	+ 0 / -0.002	5/8	0.774	6	M5 x 16	M5	3.6	69	139	1.417	1.97	0.374	0.454	0.080	1.023	1/16	0.3
HHC0301	HHT0301	30-10	1.181	+ 0 / -0.002	3/4	0.967	7	M5 x 18	M5	3.6	89	204	1.732	2.36	0.413	0.494	0.081	1.259	1/16	0.4
HHC0361	HHT0361	36-10	1.417	+ 0 / -0.002	7/8	1.161	5	M6 x 20	M6	8.7	158	333	2.047	2.83	0.448	0.533	0.085	1.496	1/16	0.6
HHC0441	HHT0441	44-10	1.732	+ 0 / -0.002	1 1/8	1.419	7	M6 x 20	M6	8.7	342	599	2.402	3.15	0.492	0.569	0.077	1.850	1/16	0.8
HHC0501	HHT0501	50-10	1.969	+ 0 / -0.002	1 3/8	1.612	8	M6 x 22	M6	8.7	482	783	2.756	3.54	0.531	0.608	0.077	2.086	1/16	1
HHC0551	HHT0551	55-10	2.165	+ 0 / -0.002	1 1/2	1.773	8	M6 x 25	M6	8.7	507	854	2.953	3.94	0.551	0.669	0.118	2.283	3/32	1.4
HHC0621	HHT0621	62-10	2.441	+ 0 / -0.002	1 3/4	1.999	10	M6 x 25	M6	8.7	859	1188	3.386	4.33	0.551	0.669	0.118	2.598	3/32	1.6
HHC0681	HHT0681	68-10	2.677	+ 0 / -0.002	1 7/8	2.193	10	M6 x 25	M6	8.7	880	1303	3.386	4.53	0.551	0.669	0.118	2.834	3/32	5.9
HHC0751	HHT0751	75-10	2.953	+ 0 / -0.002	2 1/8	2.418	7	M8 x 25	M8	22	1396	2029	3.937	5.43	0.689	0.807	0.118	3.110	1/8	2.6
HHC0801	HHT0801	80-10	3.150	+ 0 / -0.002	2 3/8	2.580	7	M8 x 25	M8	22	1708	2166	3.937	5.71	0.689	0.807	0.118	3.307	1/8	2.8
HHC0901	HHT0901	90-10	3.543	+ 0 / -0.004	2 1/2	2.902	10	M8 x 30	M8	22	2376	3570	4.488	6.10	0.788	0.943	0.155	3.700	1/8	4
HHC0951	HHT0951	95-10	3.740	+ 0 / -0.004	2 3/4	3.063	12	M8 x 30	M8	22	3416	4554	4.882	6.69	0.866	1.042	0.176	4.094	1/8	6
HHC1001	HHT1001	100-10	3.937	+ 0 / -0.004	2 7/8	3.224	12	M8 x 35	M8	22	3530	4793	4.882	6.69	0.866	1.042	0.176	4.094	1/8	6
HHC1101	HHT1101	110-10	4.331	+ 0 / -0.004	3 1/8	3.547	9	M10 x 40	M10	44	4507	6301	5.354	7.28	0.965	1.163	0.198	4.488	1/8	7
HHC1251	HHT1251	125-10	4.921	+ 0 / -0.004	3 1/2	4.031	12	M10 x 40	M10	44	6855	9770	6.299	8.46	1.024	1.218	0.194	5.275	1/8	11
HHC1401	HHT1401	140-10	5.512	+ 0 / -0.004	4	4.514	10	M12 x 45	M12	74	9824	13220	6.890	9.06	1.103	1.338	0.235	5.708	3/16	13
HHC1551	HHT1551	155-10	6.102	+ 0 / -0.004	4 1/2	4.998	12	M12 x 50	M12	74	13758	17025	7.559	10.36	1.181	1.417	0.236	6.496	3/16	17
HHC1651	HHT1651	165-10	6.496	+ 0 / -0.004	4 7/8	5.320	8	M16 x 55	M16	185	18869	23568	8.268	11.42	1.299	1.532	0.233	6.889	3/16	24
HHC1751	HHT1751	175-10	6.890	+ 0 / -0.004	5 1/4	5.643	8	M16 x 55	M16	185	20810	25003	8.661	11.81	1.299	1.532	0.233	7.283	3/16	25
HHC1851	HHT1851	185-10	7.283	+ 0 / -0.004	5 5/8	5.965	10	M16 x 65	M16	185	28401	32983	9.291	12.99	1.595	1.868	0.273	7.677	3/16	39
HHC1951	HHT1951	195-10	7.677	+ 0 / -0.004	5 7/8	6.288	12	M16 x 65	M16	185	35954	42463	9.685	13.78	1.595	1.868	0.273	8.110	3/16	44
HHC2001	HHT2001	200-10	7.874	+ 0 / -0.004	6 1/4	6.449	12	M16 x 65	M16	185	40337	43548	9.685	13.78	1.595	1.868	0.273	8.110	3/16	43
HHC2201	HHT2201	220-10	8.661	+ 0 / -0.004	6 3/8	7.094	15	M16 x 80	M16	185	46115	58213	10.630	14.57	2.027	2.325	0.298	8.897	1/4	57
HHC2401	HHT2401	240-10	9.449	+ 0 / -0.004	7	7.739	12	M20 x 80	M20	362	65323	80909	11.614	15.95	2.106	2.405	0.299	9.763	1/4	72
HHC2601	HHT2601	260-10	10.236	+ 0 / -0.004	7 5/8	8.383	14	M20 x 90	M20	362	81099	102632	12.638	16.93	2.323	2.641	0.318	10.511	1/4	89
HHC2801	HHT2801	280-10	11.024	+ 0 / -0.005	8 3/8	9.028	16	M20 x 100	M20	362	105291	126689	13.622	18.11	2.638	2.994	0.356	11.338	5/16	115
HHC3001	HHT3001	300-10	11.811	+ 0 / -0.005	9	9.673	18	M20 x 100	M20	362	128639	153375	14.331	19.10	2.796	3.155	0.359	12.125	5/16	133
HHC3201	HHT3201	320-10	12.598	+ 0 / -0.005	9 5/8	10.318	20	M20 x 100	M20	362	155246	179864	15.197	20.48	2.796	3.155	0.359	12.913	5/16	153
HHC3401	HHT3401	340-10	13.386	+ 0 / -0.005	10 1/4	10.963	24	M20 x 110	M20	362	196044	231196	16.063	22.44	3.032	3.464	0.432	13.700	5/16	209
HHC3501	HHT3501	350-10	13.780	+ 0 / -0.005	10 7/8	11.285	24	M20 x 110	M20	362	216343	237049	17.008	22.84	3.150	3.545	0.395	14.488	5/16	220
HHC3601	HHT3601	360-10	14.173	+ 0 / -0.005	11 1/4	11.608	24	M20 x 110	M20	362	225703	243851	17.008	23.23	3.150	3.545	0.395	14.488	5/16	225
HHC3801	HHT3801	380-10	14.961	+ 0 / -0.005	11 1/2	12.253	20	M24 x 120	M24	620	267503	311526	18.031	25.40	3.229	3.625	0.396	15.276	5/16	292
HHC3901	HHT3901	390-10	15.354	+ 0 / -0.005	12 1/4	12.575	21	M24 x 120	M24	620	316592	336924	18.425	25.99	3.327	3.723	0.396	15.629	3/8	305
HHC4201	HHT4201	420-10	16.535	+ 0 / -0.006	12 1/2	13.543	24	M24 x 130	M24	620	342747	414833	19.843	27.17	3.720	4.117	0.397	16.929	3/8	364
HHC4401	HHT4401	440-10	17.323	+ 0 / -0.006	13 1/2	14.187	24	M24 x 130	M24	620	384372	426268	20.748	29.53	3.977	4.372	0.395	17.716	3/8	467
HHC4601	HHT4601	460-10	18.110	+ 0 / -0.006	14 1/8	14.832	28	M24 x 130	M24	620	467097	525790	21.535	30.32	3.977	4.372	0.395	18.425	3/8	483
HHC4801	HHT4801	480-10	18.898	+ 0 / -0.006	14 3/4	15.477	30	M24 x 150	M24	620	523543	588179	22.441	31.50	4.292	4.787	0.495	19.291	1/2	555
HHC5001	HHT5001	500-10	19.685	+ 0 / -0.006	15 3/8	16.122	24	M27 x 150	M27	922	584795	655074	23.228	33.46	4.292	4.787	0.495	19.999	1/2	626

Specifications for Web Clearance Holes (diameter in inches)									
Screw Size	M5	M6	M8	M10	M12	M16	M20	M24	M27
Split Shrink Disc	0.281	0.328	0.406	0.500	0.594	0.750	0.906	1.063	1.188
Half Shrink Disc HT	0.219	0.266	0.359	0.438	0.531	0.719	0.875	1.031	1.156

Table 1

Notes:
1. Type HT: Screw length must be determined based on your X dimension. Please consult Applications Engineering.
2. Inner rings of all shrink discs are supplied with one lengthwise slit.
3. Shrink discs are available for shafts up to 40" diameter and in a variety of special designs.
4. Maximum shaft sizes listed for Shrink Disc Series SD10 and SD30 reflect equal section moduli of shaft and hub (maximum shaft diameter = $\frac{d}{1.221}$).

NOTE: Larger shrink discs for shafts up to 40" diameter are available on request.

Shaft Sizes (inch)		Maximum Diametrical Clearance Between Shaft and Hub Bore
>	≤	
	1 1/8	0.0010
1 1/8	1 15/16	0.0015
1 15/16	4 3/4	0.0020
4 3/4	7	0.0030
7	10	0.0040
10	14	0.0050
14		0.0060

Table 2
For Series SD10, SD20 and SD30

SD20 — Half SD — Light Duty

Type HC Part Number	Type HT Part Number	Size	SD bore (Hub OD)	Hub OD Tolerance	Shaft Diameter Range		Locking Screws			Ma	Mt		A	D	L	H_j	e	d_1	R	Ship wt
										Install Torque	Max. Transmitted Torque									
			d (inch)	T_Ld (inch)	ds-MIN (inch)	ds-MAX (inch)	Qty	HC Size	HT Size	(ft lb)	ds-MIN (ft lb)	ds-MAX (ft lb)	(inch)	(inch)	(inch)	(inch)	(inch)	(inch)	(inch)	(lb)
HHC1252	HHT1252	125-20	4.921	+ 0 / -0.004	3 5/8	4.125	8	M10 x 40	M10	44	4690	6672	6.220	7.28	0.965	1.223	0.258	5.118	1/8	7
HHC1402	HHT1402	140-20	5.512	+ 0 / -0.004	4 1/4	5.00	9	M10 x 40	M10	44	6846	10164	6.889	8.67	0.965	1.223	0.258	5.669	1/8	10
HHC1552	HHT1552	155-20	6.102	+ 0 / -0.004	5	5.500	11	M10 x 40	M10	44	10572	13724	7.559	9.65	0.965	1.223	0.258	6.259	1/8	12
HHC1652	HHT1652	165-20	6.496	+ 0 / -0.004	5 3/8	5.750	10	M12 x 50	M12	74	15326	18339	8.267	10.24	1.103	1.418	0.315	6.653	3/16	16
HHC1752	HHT1752	175-20	6.890	+ 0 / -0.004	5 5/8	6.125	11	M12 x 50	M12	74	17470	21794	8.661	10.83	1.103	1.418	0.315	7.047	3/16	17
HHC1852	HHT1852	185-20	7.283	+ 0 / -0.004	6	6.500	12	M12 x 50	M12	74	20822	25518	8.858	11.62	1.103	1.418	0.315	7.440	3/16	20
HHC1952	HHT1952	195-20	7.677	+ 0 / -0.004	6 1/2	7.000	15	M12 x 60	M12	74	29490	35537	9.330	12.40	1.299	1.617	0.318	7.834	3/16	27
HHC2202	HHT2202	220-20	8.661	+ 0 / -0.004	7	7.875	10	M16 x 70	M16	185	38227	50448	10.433	13.59	1.299	1.655	0.356	8.818	3/16	37
HHC2402	HHT2402	240-20	9.449	+ 0 / -0.004	7 7/8	8.500	12	M16 x 70	M16	185	53506	64932	11.417	14.57	1.594	1.950	0.356	9.606	1/4	42
HHC2602	HHT2602	260-20	10.236	+ 0 / -0.004	8 5/8	9.250	14	M16 x 70	M16	185	69970	83309	12.204	15.55	1.712	2.110	0.398	10.433	1/4	51
HHC2802	HHT2802	280-20	11.024	+ 0 / -0.005	9	9.875	16	M16 x 75	M16	185	79362	100198	13.110	16.74	1.949	2.346	0.397	11.220	1/4	67
HHC3002	HHT3002	300-20	11.811	+ 0 / -0.005	9 7/8	10.625	20	M16 x 75	M16	185	114968	135644	14.094	19.49	1.949	2.346	0.397	12.007	1/4	79
HHC3202	HHT3202	320-20	12.598	+ 0 / -0.005	10 1/2	11.375	20	M16 x 75	M16	185	119470	146023	14.881	19.49	1.949	2.386	0.437	12.795	1/4	96
HHC3402	HHT3402	340-20	13.386	+ 0 / -0.005	11 3/8	12.000	21	M16 x 75	M16	185	140500	160429	15.826	21.07	1.949	2.386	0.437	13.582	1/4	114
HHC3602	HHT3602	360-20	14.173	+ 0 / -0.005	11 7/8	12.625	16	M20 x 90	M20	362	170938	199015	16.653	21.85	2.363	2.800	0.437	14.370	5/16	137
HHC3802	HHT3802	380-20	14.961	+ 0 / -0.005	12 1/2	13.000	18	M20 x 100	M20	362	201670	222315	17.401	23.03	2.599	3.070	0.471	15.236	5/16	168
HHC3902	HHT3902	390-20	15.354	+ 0 / -0.005	12 5/8	13.75	20	M20 x 100	M20	362	223086	274543	17.795	23.43	2.599	3.075	0.476	15.629	5/16	172
HHC4202	HHT4202	420-20	16.535	+ 0 / -0.006	13 3/4	14.625	22	M20 x 100	M20	362	272248	312909	19.094	24.81	2.756	3.229	0.473	16.810	5/16	199
HHC4602	HHT4602	460-20	18.110	+ 0 / -0.006	14 5/8	16.375	28	M20 x 110	M20	362	352227	463928	20.747	26.97	3.090	3.602	0.512	18.425	3/8	257
HHC5002	HHT5002	500-20	19.685	+ 0 / -0.006	16 1/4	17.375	30	M20 x 120	M20	362	430064	507476	22.519	29.53	3.484	3.997	0.513	19.999	3/8	350

SD30 — Half SD — Heavy Duty

Type HC Part Number	Type HT Part Number	Size	SD bore (Hub OD)	Hub OD Tolerance	Shaft Diameter Range		Locking Screws			Ma	Mt		A	D	L	H_j	e	d_1	R	Ship wt
										Install Torque	Max. Transmitted Torque									
			d (inch)	T_Ld (inch)	ds-MIN (inch)	ds-MAX (inch)	Qty	HC Size	HT Size	(ft lb)	ds-MIN (ft lb)	ds-MAX (ft lb)	(inch)	(inch)	(inch)	(inch)	(inch)	(inch)	(inch)	(lb)
HHC0443	HHT0443	44-30	1.732	+ 0 / -0.002	1 1/8	1.419	5	M8 x 30	M8	22	471	827	2.598	3.35	0.649	0.768	0.119	1.890	1/16	1.2
HHC0503	HHT0503	50-30	1.969	+ 0 / -0.002	1 3/8	1.612	7	M8 x 35	M8	22	881	1375	2.874	3.74	0.689	0.866	0.177	2.126	1/16	1.8
HHC0553	HHT0553	55-30	2.165	+ 0 / -0.002	1 1/2	1.773	7	M8 x 35	M8	22	946	1512	3.071	4.13	0.689	0.866	0.177	2.323	3/32	2.1
HHC0623	HHT0623	62-30	2.441	+ 0 / -0.002	1 3/4	1.999	7	M8 x 35	M8	22	1177	1622	3.346	4.53	0.689	0.866	0.177	2.598	3/32	2.3
HHC0683	HHT0683	68-30	2.677	+ 0 / -0.002	1 7/8	2.193	8	M8 x 35	M8	22	1431	2087	3.622	4.72	0.689	0.866	0.177	2.835	3/32	2.5
HHC0753	HHT0753	75-30	2.953	+ 0 / -0.002	2 1/8	2.418	7	M10 x 40	M10	44	2276	3265	4.134	5.71	0.906	1.103	0.197	3.307	1/8	4.6
HHC0803	HHT0803	80-30	3.150	+ 0 / -0.002	2 3/8	2.580	7	M10 x 40	M10	44	2771	3486	4.134	5.71	0.906	1.103	0.197	3.307	1/8	4.4
HHC0903	HHT0903	90-30	3.543	+ 0 / -0.004	2 1/2	2.902	8	M10 x 40	M10	44	2973	4497	4.567	6.30	0.985	1.182	0.197	3.701	1/8	6
HHC1003	HHT1003	100-30	3.937	+ 0 / -0.004	2 7/8	3.224	10	M10 x 45	M10	44	4685	6350	4.961	6.69	1.063	1.260	0.197	4.094	1/8	7
HHC1103	HHT1103	110-30	4.331	+ 0 / -0.004	3 1/8	3.547	12	M10 x 45	M10	44	6058	8440	5.354	7.28	1.182	1.378	0.196	4.482	1/8	9
HHC1253	HHT1253	125-30	4.921	+ 0 / -0.004	3 1/2	4.031	12	M12 x 50	M12	74	10046	14197	6.299	8.47	1.260	1.497	0.237	5.157	3/16	13
HHC1403	HHT1403	140-30	5.512	+ 0 / -0.004	4	4.514	12	M12 x 60	M12	74	11638	15746	6.889	9.06	1.378	1.657	0.279	5.744	3/16	16
HHC1553	HHT1553	155-30	6.102	+ 0 / -0.004	4 1/2	4.998	15	M12 x 60	M12	74	17077	21137	7.795	10.36	1.496	1.772	0.276	6.496	3/16	23
HHC1653	HHT1653	165-30	6.496	+ 0 / -0.004	4 7/8	5.320	10	M16 x 70	M16	185	23479	29372	8.267	11.42	1.614	1.932	0.318	6.940	3/16	32
HHC1753	HHT1753	175-30	6.890	+ 0 / -0.004	5 1/4	5.643	10	M16 x 70	M16	185	25902	31160	8.661	11.82	1.614	1.932	0.318	7.322	3/16	33
HHC1853	HHT1853	185-30	7.283	+ 0 / -0.004	5 5/8	5.965	15	M16 x 80	M16	185	43424	50186	9.291	12.99	2.008	2.402	0.394	7.704	3/16	53
HHC1953	HHT1953	195-30	7.677	+ 0 / -0.004	5 7/8	6.288	15	M16 x 80	M16	185	44744	52910	9.685	13.78	2.106	2.500	0.394	8.102	1/4	60
HHC2003	HHT2003	200-30	7.874	+ 0 / -0.004	6 1/4	6.449	15	M16 x 80	M16	185	50233	54262	9.685	13.78	2.106	2.500	0.394	8.102	1/4	59
HHC2203	HHT2203	220-30	8.661	+ 0 / -0.004	6 3/8	7.094	20	M16 x 90	M16	185	61729	77875	10.629	14.57	2.539	2.935	0.396	8.901	1/4	76
HHC2403	HHT2403	240-30	9.449	+ 0 / -0.004	7	7.739	15	M20 x 100	M20	362	81259	100713	11.614	15.95	2.657	3.130	0.473	9.692	1/4	99
HHC2603	HHT2603	260-30	10.236	+ 0 / -0.005	7 5/8	8.383	18	M20 x 110	M20	362	103867	131626	12.637	16.93	2.972	3.445	0.473	10.511	1/4	121
HHC2803	HHT2803	280-30	11.024	+ 0 / -0.005	8 3/8	9.028	21	M20 x 120	M20	362	138411	166467	13.622	18.11	3.307	3.779	0.472	11.370	5/16	149
HHC3003	HHT3003	300-30	11.811	+ 0 / -0.005	9	9.673	22	M20 x 120	M20	362	156895	187186	14.330	19.10	3.386	3.859	0.473	12.177	5/16	165
HHC3203	HHT3203	320-30	12.598	+ 0 / -0.005	9 5/8	10.318	24	M20 x 120	M20	362	184479	213912	15.196	20.48	3.544	4.020	0.476	12.964	5/16	200
HHC3403	HHT3403	340-30	13.386	+ 0 / -0.005	10 1/4	10.963	21	M24 x 130	M24	620	244665	288982	16.535	22.44	3.859	4.335	0.476	13.724	5/16	272
HHC3603	HHT3603	360-30	14.173	+ 0 / -0.005	11	11.608	22	M24 x 140	M24	620	281430	321267	17.007	23.23	4.035	4.512	0.477	14.515	3/8	286
HHC3903	HHT3903	390-30	15.354	+ 0 / -0.005	11 5/8	12.575	24	M24 x 140	M24	620	314475	381014	18.425	25.99	4.193	4.668	0.475	15.787	3/8	384
HHC4203	HHT4203	420-30	16.535	+ 0 / -0.006	12 1/2	13.543	30	M24 x 160	M24	620	426421	516866	19.842	27.17	4.705	5.177	0.472	16.811	3/8	462
HHC4603	HHT4603	460-30	18.110	+ 0 / -0.006	13 5/8	14.832	28	M27 x 170	M27	922	572280	701947	21.535	30.32	5.000	5.556	0.556	18.503	1/2	624
HHC5003	HHT5003	500-30	19.685	+ 0 / -0.006	14 7/8	16.122	32	M27 x 180	M27	922	721680	874666	23.622	33.47	5.434	5.986	0.552	19.999	1/2	838

B-LOC® Single Taper Shrink Discs (SD40)

We also offer SD40 Single Taper Shrink Discs as an alternative to SD10, SD20 & SD30 Double Taper Shrink Discs. The SD40 units have the following attributes:

- **External locking device**
- **Simpler two piece design**
- **Integrated removal holes**
- **Provides extremely concentric and well-balanced mechanical interference fit**

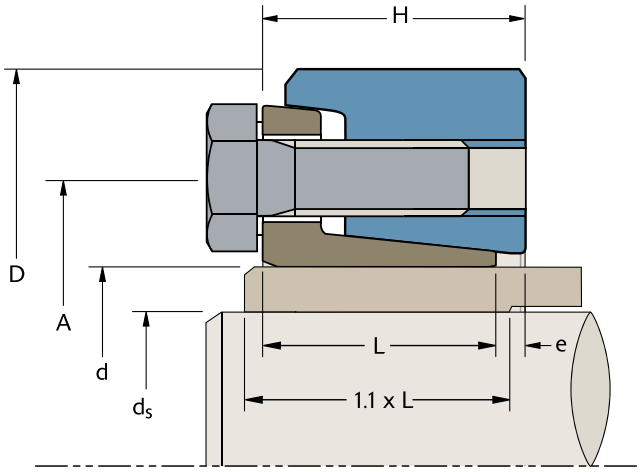

The advantages of the SD40 over the SD10, SD20 and SD30 include:

- No torque wrench needed.* Simply tighten the screws in clockwise sequence, using several passes, until the front faces of the flange and of the outer ring are aligned
- Save up to 80% of mounting time if using a powered tool
- High transmissible torque
- Aligning the two flanges (flush mounted) ensures concentricity, reducing the need for dynamic balancing

Note: Dynamic fit pressures vary between Single Taper and Double Taper shrink discs, as this is based on effective contact length. This should be taken into consideration.

* A torque wrench is recommended for best performance.

Please contact our Applications Engineering Group at +1-800-243-3374 or ae@fennerdrives.com for more information on B-LOC Single Taper Shrink Discs.



Shaft Sizes (inch)		Maximum Diametrical Clearance Between Shaft and Hub Bore
>	≤	
1.18	1.97	0.0016
1.97	3.15	0.0019
3.15	4.72	0.0022
4.72	6.30	0.0026
6.30	7.09	0.0031
7.09	9.84	0.0035
9.84	12.40	0.0040
12.40	15.75	0.0044
15.75	19.69	0.0048
19.69	22.05	0.0054

SD40 — Single Taper

Part Number	Size	SD bore (Hub OD)	Hub OD Tolerance	Shaft Diameter Range		Locking Screws		M_a	M_t		A	D	L	H	e	R	Ship wt
								Install Torque	Max. Transmitted Torque								
		d (inch)	T_Ld (inch)	ds-MIN (inch)	ds-MAX (inch)	Qty	Size	(ft lb)	ds-MIN (ft lb)	ds-MAX (ft lb)	(inch)	(inch)	(inch)	(inch)	(inch)	(inch)	(lb)
H0504	50-40	1.969	+0.0010/-0.0020	1.496	1.654	8	M8 x 20	25	1180	1475	2.677	3.543	0.925	1.028	0.103	0.086	1.8
H0554	55-40	2.165	+0.0012/-0.0024	1.654	1.890	8	M8 x 20	25	1254	1844	2.835	3.937	1.024	1.142	0.118	0.090	2.4
H0604	60-40	2.362	+0.0012/-0.0024	1.890	2.047	9	M8 x 20	25	1696	2139	3.150	4.331	1.024	1.152	0.128	0.094	2.9
H0624	62-40	2.441	+0.0012/-0.0024	1.890	2.047	9	M8 x 20	25	1696	2139	3.150	4.331	1.024	1.152	0.128	0.096	2.9
H0684	68-40	2.677	+0.0012/-0.0024	1.969	2.362	9	M8 x 20	25	1770	2950	3.386	4.528	1.024	1.157	0.133	0.101	2.9
H0754	75-40	2.953	+0.0012/-0.0024	2.165	2.559	10	M10 x 25	52	2803	4426	3.937	5.433	1.063	1.209	0.146	0.106	5.1
H0804	80-40	3.150	+0.0012/-0.0024	2.362	2.756	10	M10 x 25	52	3172	4794	4.094	5.551	1.063	1.224	0.161	0.110	5.1
H0854	85-40	3.346	+0.0014/-0.0028	2.559	2.953	11	M10 x 25	52	4426	6343	4.488	6.102	1.339	1.504	0.165	0.114	7.1
H0904	90-40	3.543	+0.0014/-0.0028	2.559	2.953	11	M10 x 25	52	4426	6343	4.488	6.102	1.339	1.504	0.165	0.119	7.1
H0954	95-40	3.740	+0.0014/-0.0028	2.756	3.150	14	M10 x 25	52	5532	7819	4.882	6.693	1.535	1.711	0.176	0.123	9.5
H1004	100-40	3.937	+0.0014/-0.0028	2.756	3.150	14	M10 x 25	52	5532	7819	4.882	6.693	1.535	1.711	0.176	0.127	9.5
H1054	105-40	4.134	+0.0014/-0.0028	3.150	3.543	12	M12 x 35	89	9441	12539	5.354	7.283	1.713	1.933	0.220	0.131	13
H1104	110-40	4.331	+0.0014/-0.0028	3.150	3.543	12	M12 x 35	89	9441	12539	5.354	7.283	1.713	1.933	0.220	0.135	13
H1154	115-40	4.528	+0.0014/-0.0028	3.346	3.740	14	M12 x 35	89	10105	13424	5.787	7.756	1.890	2.087	0.197	0.139	16
H1204	120-40	4.724	+0.0014/-0.0028	3.346	3.740	14	M12 x 35	89	10105	13424	5.787	7.756	1.890	2.087	0.197	0.143	15
H1254	125-40	4.921	+0.0017/-0.0033	3.543	3.937	14	M12 x 35	89	12244	15858	6.220	8.465	1.890	2.102	0.212	0.147	19
H1304	130-40	5.118	+0.0017/-0.0033	3.740	4.331	12	M14 x 40	140	15121	21759	6.496	9.055	2.008	2.264	0.256	0.151	24
H1354	135-40	5.315	+0.0017/-0.0033	3.740	4.331	12	M14 x 40	140	15121	21759	6.496	9.055	2.008	2.264	0.256	0.155	24
H1404	140-40	5.512	+0.0017/-0.0033	3.937	4.528	12	M14 x 40	140	17334	23972	6.772	9.055	2.008	2.276	0.268	0.159	23
H1504	150-40	5.906	+0.0017/-0.0033	4.331	4.921	14	M14 x 40	140	23234	31717	7.323	10.354	2.165	2.449	0.284	0.167	34
H1554	155-40	6.102	+0.0017/-0.0033	4.331	4.921	14	M14 x 40	140	23234	31717	7.323	10.354	2.165	2.449	0.284	0.171	34
H1604	160-40	6.299	+0.0017/-0.0033	4.724	5.315	12	M16 x 45	214	33192	43518	7.795	11.417	2.402	2.693	0.291	0.176	49
H1654	165-40	6.496	+0.0017/-0.0033	4.724	5.315	12	M16 x 50	214	33192	43518	7.795	11.417	2.402	2.693	0.291	0.180	47
H1704	170-40	6.693	+0.0017/-0.0033	5.118	5.709	14	M16 x 50	214	40568	52370	8.189	11.811	2.402	2.713	0.311	0.184	51
H1754	175-40	6.890	+0.0017/-0.0033	5.118	5.709	14	M16 x 50	214	40568	52370	8.189	11.811	2.402	2.713	0.311	0.188	50
H1804	180-40	7.087	+0.0017/-0.0033	5.512	6.102	16	M16 x 50	214	59746	74498	8.740	12.598	3.051	3.346	0.295	0.192	74
H1854	185-40	7.283	+0.0020/-0.0038	5.512	6.102	16	M16 x 50	214	59746	74498	8.740	12.598	3.051	3.346	0.295	0.196	72
H1904	190-40	7.480	+0.0020/-0.0038	5.906	6.496	16	M16 x 50	214	71547	88512	9.370	13.386	3.051	3.453	0.402	0.200	84
H1954	195-40	7.677	+0.0020/-0.0038	5.906	6.496	16	M16 x 50	214	71547	88512	9.370	13.386	3.051	3.453	0.402	0.204	82
H2004	200-40	7.874	+0.0020/-0.0038	5.906	6.496	16	M16 x 50	214	71547	88512	9.370	13.386	3.051	3.453	0.402	0.208	80
H2204	220-40	8.661	+0.0020/-0.0038	6.299	7.087	15	M20 x 60	420	95888	125392	10.551	14.567	3.799	4.234	0.435	0.224	117
H2404	240-40	9.449	+0.0020/-0.0038	6.693	7.874	16	M20 x 60	420	112115	161534	11.339	15.945	3.858	4.374	0.516	0.241	146
H2604	260-40	10.236	+0.0022/-0.0043	7.480	8.661	16	M20 x 60	420	158584	221280	12.283	16.929	4.350	4.933	0.583	0.257	181
H2804	280-40	11.024	+0.0022/-0.0043	8.268	9.449	18	M20 x 60	420	208003	280288	13.150	18.110	4.764	5.512	0.748	0.273	227
H3004	300-40	11.811	+0.0022/-0.0043	8.661	9.843	16	M24 x 70	730	269224	359211	14.173	19.094	4.882	5.504	0.622	0.290	265
H3204	320-40	12.598	+0.0024/-0.0047	9.449	10.630	18	M24 x 70	730	327494	427808	14.961	20.472	4.882	5.575	0.693	0.306	304
H3404	340-40	13.386	+0.0024/-0.0047	9.843	11.024	18	M24 x 70	730	395354	511157	15.827	22.441	5.472	6.236	0.764	0.322	417
H3604	360-40	14.173	+0.0024/-0.0047	10.630	11.417	20	M24 x 70	730	506731	612208	16.693	23.228	5.630	6.417	0.787	0.339	456
H3904	390-40	15.354	+0.0024/-0.0047	11.417	12.598	18	M27 x 70	1092	633598	787757	17.874	25.591	5.827	6.661	0.834	0.363	549
H4204	420-40	16.535	+0.0027/-0.0052	12.598	13.780	20	M27 x 70	1092	785544	959618	19.134	26.378	6.535	7.323	0.788	0.387	628
H4404	440-40	17.323	+0.0027/-0.0052	13.386	14.567	21	M27 x 70	1092	983221	1184586	19.921	29.134	6.772	7.634	0.862	0.404	866
H4604	460-40	18.110	+0.0027/-0.0052	14.173	15.354	21	M27 x 70	1092	1130003	1346858	21.024	30.315	7.008	7.992	0.984	0.420	924
H4704	470-40	18.504	+0.0027/-0.0052	14.567	15.748	21	M27 x 70	1092	811360	1032640	21.181	27.756	7.874	8.646	0.772	0.428	750
H4804	480-40	18.898	+0.0027/-0.0052	14.961	16.142	21	M30 x 100	1460	1343907	1586578	21.732	31.496	8.228	9.161	0.933	0.436	1085
H5004	500-40	19.685	+0.0027/-0.0052	15.748	16.929	24	M30 x 100	1460	1530520	1793843	23.937	33.465	7.795	8.685	0.890	0.453	1250
H5304	530-40	20.866	+0.0030/-0.0057	16.929	18.110	24	M30 x 100	1460	1548960	1792368	23.937	33.465	8.504	9.539	1.035	0.477	1162
H5604	560-40	22.047	+0.0030/-0.0057	17.717	18.898	24	M30 x 100	1460	2064542	2377285	24.882	37.008	8.661	9.630	0.969	0.502	1711
H5904	590-40	23.228	+0.0030/-0.0057	18.504	19.685	28	M30 x 100	1460	2408264	2755674	26.142	37.795	9.291	10.260	0.969	0.526	1841
H6204	620-40	24.409	+0.0030/-0.0057	19.685	21.260	28	M30 x 100	1460	2760099	3267568	27.795	38.189	10.197	11.378	1.181	0.550	2346

TOLERANCE (T_L)

T_L = .003" for shafts up to 1"
.006" for shafts over 1"

d = Shaft diameter machined to d+0/-T_L



Metric hex head locking screws grade 10.9. (See M_a for install torque.)

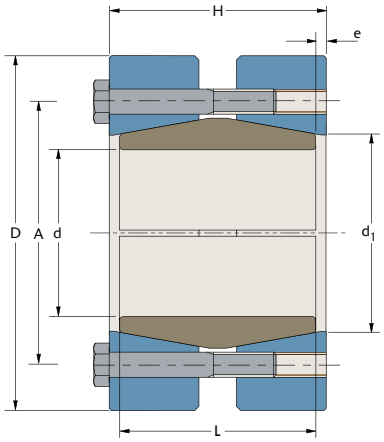

Note: Shaft engagement equal for both ends with gap not exceeding 5% of shaft diameter.

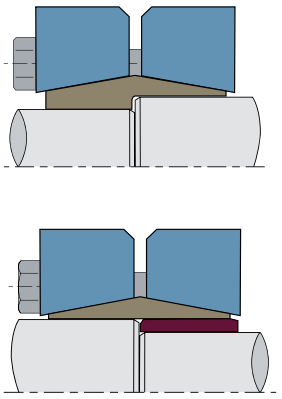

WK Couplings can be manufactured to accommodate different shaft diameters; this can also be accomplished using an adaptor sleeve.

WK Series

Part Number	Type	d (in)	D (in)	H (in)	L (in)	e (in)	d1 (in)	A (in)	Locking Screws Qty	Locking Screws Size	M_a Install Torque (ft lb)	M_t Maximum Transmissible Torque (ft lb)	Ship wt (lb)
HWK0152010	WK 15	5/8	2.047	1.339	1.181	0.079	0.827	1.378	3	M6 x 30	8.7	132	0.9
HWK0152011		11/16										145	0.9
HWK0152012		3/4										158	0.9
HWK0202013	WK 20	13/16	2.362	1.575	1.339	0.118	1.024	1.614	5	M6 x 35	8.7	286	1.4
HWK0202014		7/8										308	1.3
HWK0202015		15/16										330	1.3
HWK0252100	WK 25	1	2.598	1.732	1.496	0.118	1.260	1.890	7	M6 x 35	8.7	492	1.8
HWK0252101		1 1/16										523	1.8
HWK0252102		1 1/8										554	1.7
HWK0302103	WK 30	1 3/16	2.992	1.890	1.654	0.118	1.496	2.126	8	M6 x 40	8.7	668	2.7
HWK0302104		1 1/4										703	2.7
HWK0302106		1 3/8										774	2.6
HWK0402107	WK 40	1 7/16	3.780	2.205	1.969	0.118	1.850	2.638	7	M8 x 45	22	1371	5
HWK0402108		1 1/2										1430	5
HWK0402110		1 5/8										1550	5
HWK0402111		1 11/16										1609	5
HWK0402112		1 3/4										1669	5
HWK0502114	WK 50	1 7/8	4.409	2.676	2.362	0.157	2.283	3.150	10	M8 x 50	22	2554	8
HWK0502115		1 15/16										2639	8
HWK0502200		2										2724	8
HWK0502202		2 1/8										2895	8
HWK0602203	WK 60	2 3/16	4.724	3.071	2.756	0.157	2.598	3.504	12	M8 x 55	22	3576	10
HWK0602204		2 1/4										3678	10
HWK0602206		2 3/8										3882	10
HWK0602207		2 7/16										3984	10
HWK0602208		2 1/2										4087	9
HWK0702209	WK 70	2 9/16	5.826	3.464	3.150	0.157	3.110	4.173	12	M10 x 65	44	6642	19
HWK0702210		2 5/8										6804	19
HWK0702211		2 11/16										6966	18
HWK0702212		2 3/4										7128	18
HWK0702214		2 7/8										7452	17
HWK0802215	WK 80	2 15/16	6.693	4.095	3.701	0.197	3.701	4.961	10	M12 x 80	74	9128	28
HWK0802300		3										9323	28
HWK0802302		3 1/8										9711	27
HWK0802304		3 1/4										10099	26
HWK0802306		3 3/8										10488	26
HWK0902307	WK 90	3 7/16	7.283	4.567	4.173	0.197	4.094	5.433	12	M12 x 80	74	12819	36
HWK0902308		3 1/2										13052	36
HWK0902310		3 5/8										13518	35
HWK0902312		3 3/4										13984	34
HWK0902314		3 7/8										14450	34
HWK1002315	WK 100	3 15/16	7.756	4.960	4.488	0.236	4.488	5.866	15	M12 x 90	74	18354	43
HWK1002400		4										18645	43
HWK1002404		4 1/4										19810	42

NOTE: If your application requires increased torque transmission and/or thrust, solvent clean the interface between the bore of the WK unit and the shaft to produce an oil free connection. This in turn will result in up to a 20% increase in M_t and Th performance values. Contact Fenner Drives Applications Engineering for additional details.

B-LOC® Rigid Shrink Disc Couplings

B-LOC Shrink Discs are perfect for creating custom rigid shaft couplings that transmit high torque and/or bending loads. Due to their high load capacities, B-LOC Shrink Disc couplings are frequently used to shaft-mount hydraulic drives and speed reducers. This design solution:

- Can easily accommodate different sized shafts.
- Results in a zero backlash interference fit that will never wear out or pound out, even when subjected to repeated shock or reversing loads.
- Eliminates the need for support structures or foundations, since the drive/reducer is mounted directly to the shaft.
- Eliminates the need for costly flexible couplings, since shaft misalignment issues disappear.
- Facilitates quick and easy coupling mounting and disassembly, even in field installations.
- Permits infinite angular and axial adjustment.

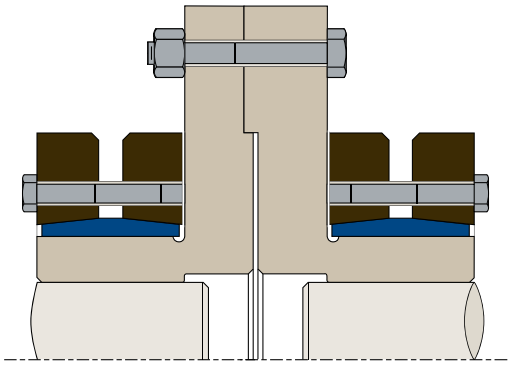

Flange-type Shrink Disc Coupling

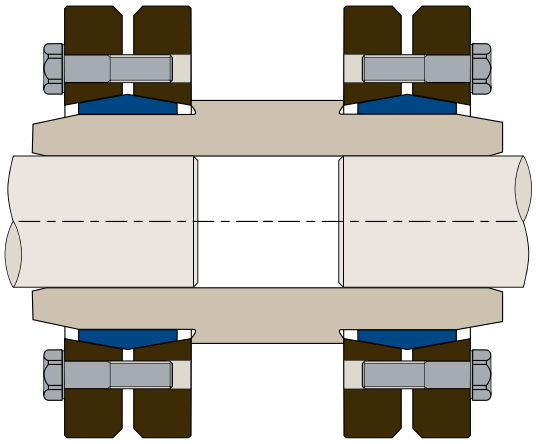

Sleeve-type Shrink Disc Coupling

Please contact our Applications Engineering Group at +1-800-243-3374 or ae@fennerdrives.com for more information on B-LOC Rigid Shrink Disc Couplings.

Trantorque Installation Wrenches

Fenner Drives offers a complete line of high-quality crowfoot wrenches for use in the installation of Trantorque units. When installing a Trantorque GT, Trantorque EN or Trantorque SS unit, we recommend also using the U style for counter-torque.

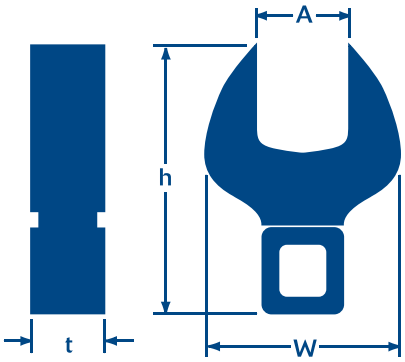

Style C
Installation Nut

1/2" Square Drive

Part Number	Shaft Size (inches)	Wrench Style	Dimensions (inches)			
			A	h	w	t
6202990020	5/8 – 3/4	C	1 1/4	2.88	2.25	0.60
6202990024U	5/8 – 3/4	U	1 1/2	4.91	4.88	0.31
6202990024	13/16 – 1	C	1 1/2	3.44	2.75	0.75
6202990028U	13/16 – 1	U	1 3/4	4.94	5.13	0.38
6202990028	1 1/16 – 1 1/4	C	1 3/4	3.50	3.25	0.52
6202990032U	1 1/16 – 1 1/4	U	2	5.68	5.37	0.50
6202990032	1 5/16 – 1 1/2	C	2	3.98	3.57	0.51
6202990038	1 5/16 – 1 1/2	U	2 3/8	5.93	5.75	0.50

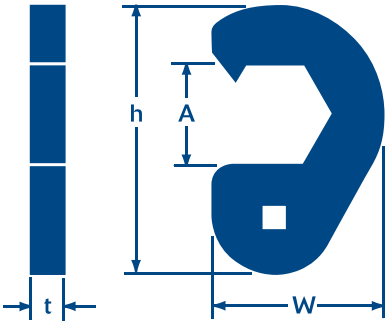

Style G
Installation Nut

3/4" Square Drive

Part Number	Shaft Size (inches)	Wrench Style	Dimensions (inches)			
			A	h	w	t
6202990036	1 9/16 – 1 3/4	G	2 1/4	6.64	4.38	0.75
6202990042	1 9/16 – 1 3/4	U	2 5/8	6.16	6.00	0.63
6202990040	1 13/16 – 2	G	2 1/2	6.89	4.63	0.75
6202990046	1 13/16 – 2	U	2 7/8	6.17	6.00	0.75
6202990044	2 1/16 – 2 1/4	G	2 3/4	7.20	4.34	0.75
6202990050	2 1/16 – 2 1/4	U	3 1/8	6.10	6.00	0.75
6202990048	2 5/16 – 2 1/2	G	3	7.88	5.03	0.75
6202990054	2 5/16 – 2 1/2	U	3 3/8	8.00	8.50	0.63
6202990052	2 9/16 – 2 3/4	G	3 1/4	8.57	5.72	0.75
6202990058	2 9/16 – 2 3/4	U	3 5/8	7.11	7.41	0.75
6202990056	2 13/16 – 3	G	3 1/2	9.32	5.72	0.75
6202990062	2 13/16 – 3	U	3 7/8	7.74	7.94	0.75

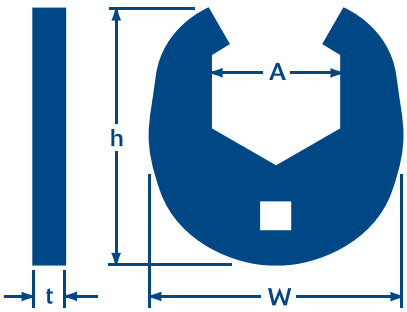

Style U
Counter-Torque

Application Data Sheet

Please provide the details for your application on the form below and fax to +1-717-665-2597, email to ae@fennerdrives.com or call +1-800-243-3374. Our Applications Engineering team will review your application data and contact you with product recommendations.

Contact Information

Company Name _____

Address _____

City _____ State _____ Zip _____ Country _____

Contact _____ Title _____ Phone _____ Fax _____

E-mail _____ Web Address _____

Select Product

❑ Keyless Bushing ❑ Shrink Disc ❑ WK Rigid Coupling

Torque/RPM/Application Details

Nominal Running Torque _____

Peak Torque (if known) _____

Type of Prime Mover (motor, engine, etc.) _____

_____

Type of Application (fan, conveyor, etc.) _____

_____

Operating speed (RPM) at proposed connection _____

Input HP _____

Thrust Load _____

Radial Load _____

Shaft Details (solid)

Shaft Diameter
(nominal/tolerance or actual measured) _____

Surface Material _____

Material (1020 steel, etc.) _____

Useable Length _____

Finish (zinc, chrome, etc.) _____

Shaft Details (hollow)

Outside Diameter
(nominal/tolerance or actual measured) _____

Inside Diameter _____

Surface Material _____

Material (1020 steel, etc.) _____

Useable Length _____

Finish (zinc, chrome, etc.) _____

Mounted Component Details

Mounted Component (sprocket, gear, pulley, lever arm, coupling hub, etc.)

Component Material
(steel, aluminum, etc.) _____

Material Yield Strength _____

Length thru Bore _____

Bore Diameter (if existing) _____

Bore Surface Finish _____

Component Hub Diameter _____

Finish on shaft and/or component
(zinc, chrome, etc.) _____

Thrust Load _____

Operating Conditions

Temperature Range _____

Oil/Chemicals _____

Washdown _____

Start/Stops _____

Frequency of assembly/disassembly _____

Bending Moments (ft lbs) _____

Commercial Requirements

Quantity Required _____

Annual Useage _____

Target Price _____

Finish Requirements

❑ YES

Type: ❑ Electroless Nickel
❑ Thin Dense Chrome
❑ Stainless Steel

Comments/Attachments

_____

_____

_____

_____

_____

_____

_____

Count on Fenner Drives.

We've got the right product for your application.



PowerTwist Plus V-BELTS

SUPER T LINK SP WEDGE BELTS

NU T LINK V-BELTS

Trantorque Keyless Bushings

B-LOC KEYLESS BUSHINGS

EAGLE POLYURETHANE BELTING & O-RINGS

T-MAX BELT & CHAIN TENSIONERS

PowerMax PULLEYS & IDLERS

Trackstar UHMW BELT & CHAIN GUIDES

Fenner Drives is a proven leader in the design and manufacture of problem-solving power transmission and motion transfer components. Recognized widely for our expertise and innovation in manufacturing technology, we consistently blend reliability, quality and value in our products. As part of our commitment to provide unsurpassed technical support and service, we maintain extensive engineering, development and testing facilities.

Visit us at www.fennerdrives.com

Fenner Drives®

US

www.fennerdrives.com
TEL: +1-800-243-3374
TEL: +1-717-665-2421
FAX: +1-717-665-2649

UK

www.fennerdrives.com
TEL: +44 (0)870 757 7007
TEL: +44 (0)1924 482 470
FAX: +44 (0)1924 482 471

Trantorque® and B-LOC® are registered trademarks of Fenner Drives in the United States and/or other countries. All other brand and product names are trademarks, registered trademarks or service marks of their respective holders.

Information subject to change without prior notification. Visit www.fennerdrives.com/catalogs for the most current information.

©2012 FENNER DRIVES FDKB-011