Temperature monitoring of the motor winding

G2TFK02 24-240V

Monitoring relays - GAMMA series

Tripping unit for temperature monitoring of the motor winding

with and without short circuit monitoring of the thermistor line (selectable by means of terminals)

Optional evaluation of one thermal contact

Test function with integrated reset key

Zoom voltage 24 to 240V a.c./d.c.

2 change over contacts

Width 22.5mm

Industrial design



Technical data

1. Functions
Temperature monitoring of the motor winding (max. 6 PTC) with fault latch for temperature probes in accordance with DIN 44081, short circuit monitoring of the thermistor line (selectable by means of terminals), test function with integrated test/reset key.

2. Time ranges

	Adjustment range
Start-up suppression time:	-
Tripping delay:	-

3. Indicators

Green LED ON:	indication of supply voltage
Yellow LED ON/OFF:	indication of relay output
Red LED ON/OFF:	indication of failure

4. Mechanical design
Self-extinguishing plastic housing, IP rating IP40
Mounted on DIN-Rail TS 35 according to EN 60715
Mounting position: any
Shockproof terminal connection according to VBG 4 (PZ1 required), IP rating IP20. Tightening torque: max. 1Nm
Terminal capacity:
- 1 x 0.5 to 2.5mm² with/without mulitcore cable end
- 1 x 4mm² without mulitcore cable end
- 2 x 0.5 to 1.5mm² with/without mulitcore cable end
- 2 x 2.5mm² flexible without mulitcore cable end

5. Input circuit

Supply voltage:	
24 to 240V a.c./d.c.	terminals A1-A2 (galvanically separated)
Tolerance:	
24 to 240V d.c.	-20% to +25%
24 to 240V a.c.	-15% to +10%
Rated frequency:	
48 to 400 Hz	24 to 240V a.c.
16 to 48 Hz	48 to 240V a.c.
Rated consumption:	4.5 VA (1W)
Duty cycle:	100%
Reset time:	500 ms
Residual ripple for d.c.:	10%
Drop-out voltage:	>15% of the supply voltage
Overvoltage category:	III (in accordance with IEC 60664-1)
Rated surge voltage:	4 kV

6. Output circuit
2 potential free change-over contacts

Rated voltage:	250V a.c.
Switching capacity:	750VA (3A / 250V a.c.)
If the distance between the devices is less than 5mm.	
Switching capacity:	1250VA (5A / 250V a.c.)
If the distance between the devices is greater than 5mm.	
Fusing:	5A fast acting
Mechanical life:	20 x 10^6 operations
Electrical life:	2 x 10^5 operations at 1000 VA resistive load
Switching frequency:	max. 60/min at 100VA resistive load max. 6/min at 1000VA resistive load (in accordance with IEC 60947-5-1)
Overvoltage category:	III (in accordance with IEC 60664-1)
Rated surge voltage:	4kV

7. Measuring circuit

Input:	terminals T1-T2 or T1-T3
Initial resistance:	<1.5 kΩ
Response value (relay in off-position):	≥3.6 kΩ
Release value (relay in on-position):	≤1.8 kΩ
Disconnection (short circuit thermistor):	<20 Ω
Measuring voltage T1-T2, T1-T3:	≤2.5V d.c. at R ≤4.0 kΩ (according to DINVDE 0660 part 302)
Measuring voltage T1-T2:	max. 7,5 V at open circuit T1-T3
Overvoltage category:	III (in accordance with IEC 60664-1)
Rated surge voltage:	4 kV

8. Control contact R

Function:	external reset key
Loadable:	no
Line length R-T2:	max. 10m (twisted pair)
Control pulse length:	-
Reset:	potential free normally open contact, terminals R-T2

9. Accuracy

Base accuracy:	±10% (of maximum scale value)
Frequency response:	-
Adjustment accuracy:	-
Repetition accuracy:	≤1%
Voltage influence:	-
Temperature influence:	≤0.1% / °C

10. Ambient conditions

Ambient temperature:	-25 to +55°C (in accordance with IEC 60068-1) -25 to +40°C (in accordance with UL 508)
Storage temperature:	-25 to +70°C
Transport temperature:	-25 to +70°C
Relative humidity:	15% to 85% (in accordance with IEC 60721-3-3 class 3K3)
Pollution degree:	3 (in accordance with IEC 60664-1)
Vibration resistance:	10 to 55Hz 0.35mm (in accordance with IEC 60068-2-6)
Shock resistance:	15g 11ms (in accordance with IEC 60068-2-27)

Functions

Temperature monitoring of the motor winding with fault latch
If the supply voltage U is applied (green LED illuminated) and the cumulative resistance of the PTC-circuit is less than 3.6kΩ (standard temperature of the motor), the output relays switch into on-position. Pressing the test/reset key under this conditions forces the output relays to switch into off-position. The output relays remain in this state as long as the test/reset key is pressed and thus the switching function can be checked in case of fault. The test function is not effective using an external reset key. When the cumulative resistance of the PTC-circuit exceeds 3.6kΩ (at least one of the PTCs has reached the cut-off temperature), the output relays switch into off-position (red LED illuminated). The output relays switch into on-position again (red LED not illuminated), if the cumulative resistance drops below 1.8kΩ by cooling down of the PTC and either a reset key (internal or external) was pressed or the supply voltage was disconnected and re-applied.

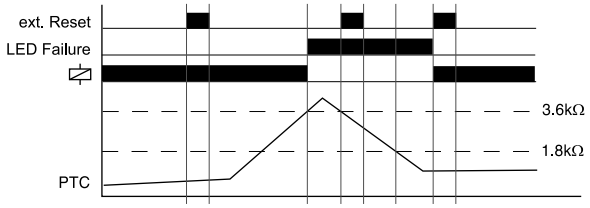

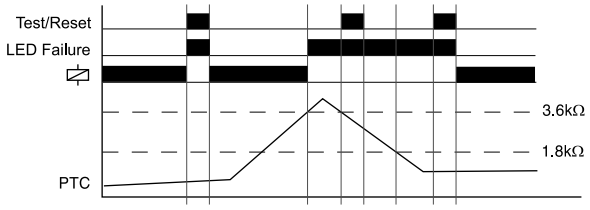

Short circuit monitoring of the thermistor line (T1-T2)
In case of a short circuit of the probe line (cumulative resistance less than 20Ω) the output relays switch into off-position (red LED illuminated) if the additional function “Short circuit monitoring” (connection of the probe to the terminals T1-T2) is activated.
In that case the output relays do not change their state, neither by pressing a reset key nor by disconnecting and re-applying the supply voltage.

Connections

Monitoring of the thermistor with short circuit detection

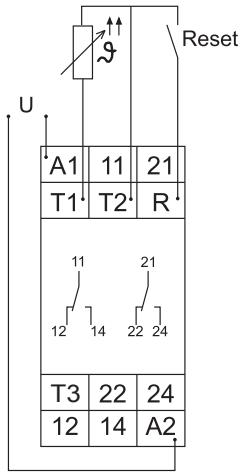

Connections

Monitoring of the thermistor without short circuit detection

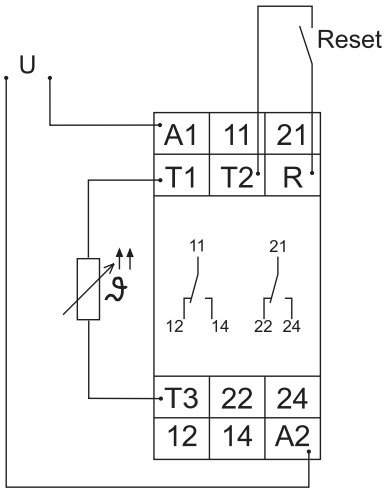

Monitoring of the thermo switch

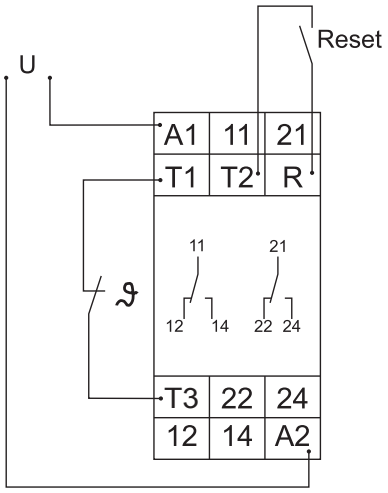

Dimensions

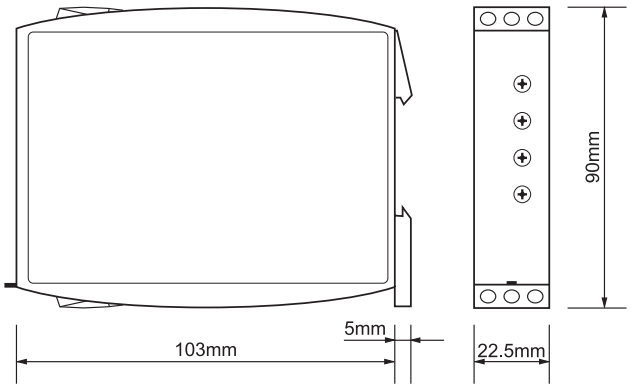

RELEASE 2013/08

Subject to alterations and errors

Technik Braucht Kontrolle