PV7704

Pressure switch with IO-Link

PV-010MSER14-UFRVG/US/ /

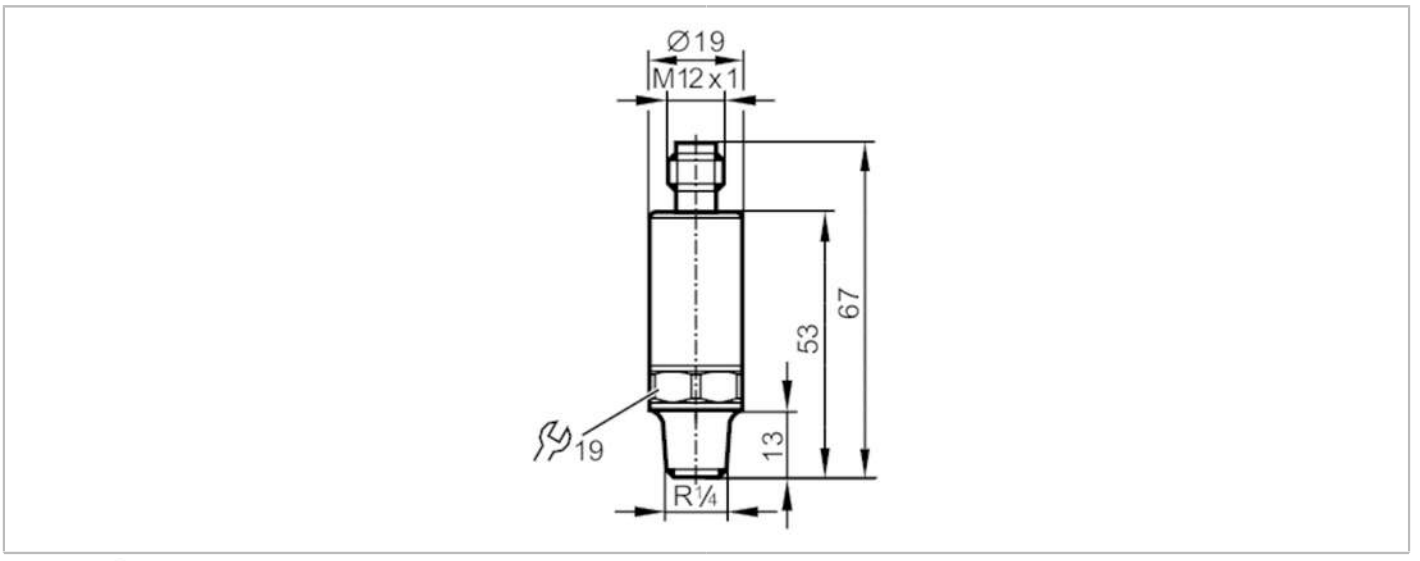

Product characteristics			
Number of inputs and outputs		Number of digital outputs: 2	
Measuring range		-100...1000 kPa	-0.1...1 MPa
Process connection		threaded connection R 1/4 external thread internal thread:M5	
Application			
Measuring element		metallic thin film cell	
Application		for industrial applications	
Media		liquids and gases	
Medium temperature	[°C]	-40...90	
Min. bursting pressure	[MPa]	30	
Pressure rating	[MPa]	2.5	
Note on pressure rating		static	
Vacuum resistance		-1000 mbar	-0.1 MPa
Type of pressure		relative pressure; vacuum	
Electrical data			
Operating voltage	[V]	18...30 DC	
Current consumption	[mA]	< 15	
Min. insulation resistance	[MΩ]	100; (500 V DC)	
Protection class		III	
Reverse polarity protection		yes	
Power-on delay time	[s]	< 0.3	
Inputs / outputs			
Number of inputs and outputs		Number of digital outputs: 2	
Outputs			
Total number of outputs		2	
Output signal		switching signal; IO-Link; (configurable)	
Electrical design		PNP/NPN	
Number of digital outputs		2	

PV7704

Pressure switch with IO-Link

PV-010MSER14-UFRVG/US/ /

Output function		normally open / normally closed; (parameterisable)		
Max. voltage drop switching output DC	[V]	2		
Permanent current rating of switching output DC	[mA]	100		
Switching frequency DC	[Hz]	< 170		
Short-circuit protection		yes		
Type of short-circuit protection		pulsed		
Overload protection		yes		
Measuring/setting range				
Measuring range		-100...1000 kPa	-0.1...1 MPa	
Set point SP	[MPa]	-0.09...1		
Reset point rP	[MPa]	-0.095...0.995		
In steps of	[MPa]	0.0005		
Factory setting		SP1 = 0.25 MPa	rP1 = 0.23 MPa	ou1 = Hno;
		SP2 = 0.75 MPa	rP2 = 0.73 MPa	ou2 = Hno;
		dS1/dS2 = 0 ms	dr1/dr2 = 0 ms	
		coF = 0 %	P-n = PnP	dAP= 60 ms
Accuracy / deviations				
Switch point accuracy	[% of the span]	< ± 0,5 (nach DIN EN 61298-2)		
Repeatability	[% of the span]	< ± 0,05; (with temperature fluctuations < 10 K)		
Characteristics deviation	[% of the span]	< ± 0,5; (linearity incl. hysteresis and repeatability, limit value setting to DIN EN IEC 62828-1)		
Linearity deviation	[% of the span]	< ± 0,1 (BFSL) / < ± 0,2 (LS)		
Hysteresis deviation	[% of the span]	< ± 0,2		
Long-term stability	[% of the span]	< ± 0,1; (per 6 months)		
Temperature coefficient zero point	[% of the span / 10 K]	< 0,1 (-25...90 °C) / < 0,2 (-40...-25 °C)		
Temperature coefficient span	[% of the span / 10 K]	< 0,1 (-25...90 °C) / < 0,2 (-40...-25 °C)		
Response times				
Response time	[ms]	< 3		
Software / programming				
Parameter setting options		hysteresis / window; normally open / normally closed; switching logic; switch-on/switch-off delay; Damping		
Interfaces				
Communication interface		IO-Link		
Transmission type		COM2 (38,4 kBaud)		
IO-Link revision		1.1		
SDCI standard		IEC 61131-9		
Profiles		Smart Sensor: Process Data Variable; Device Identification, Device Diagnosis		

PV7704

Pressure switch with IO-Link

PV-010MSER14-UFRVG/US/ /

SIO mode		yes	
Required master port type		A	
Process data analogue		2	
Process data binary		2	
Min. process cycle time	[ms]	5	
Supported DeviceIDs		**Type of operation**	**DeviceID**
		default	784

Operating conditions			
Ambient temperature	[°C]	-40...90	
Storage temperature	[°C]	-40...100	
Protection		IP 67; IP 69K	

Tests / approvals			
EMC		DIN EN 61326-1	
Shock resistance		DIN EN 60068-2-27	500 g (1 ms)
Vibration resistance		DIN EN 60068-2-6	20 g (10...2000 Hz)
MTTF	[years]	667.77	
UL approval		UL Approval no.	J015
Pressure Equipment Directive		Sound engineering practice; can be used for group 2 fluids; group 1 fluids on request	

Mechanical data		
Weight	[g]	62.5
Housing		cylindrical
Dimensions	[mm]	Ø 19 / L = 67
Materials		stainless steel (630/1.4542/17-4 PH); stainless steel (316L/1.4404); PEI
Materials (wetted parts)		stainless steel (303/1.4305); stainless steel (630/1.4542/17-4 PH)
Min. pressure cycles		60 million; (at 1.2 times nominal pressure)
Tightening torque	[Nm]	50; (recommended tightening torque; depends on lubrication, seal and pressure rating)
Process connection		threaded connection R 1/4 external thread internal thread:M5
Restrictor element integrated		yes

Remarks	
Remarks	BFSL = Best Fit Straight Line
	LS = limit value setting
Pack quantity	1 pcs.

Electrical connection

Connector: 1 x M12; coding: A



PV7704

Pressure switch with IO-Link

PV-010MSER14-UFRVG/US/ /

Connection

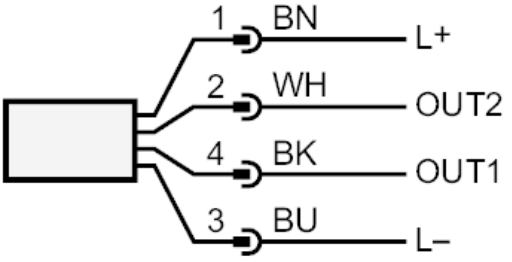

OUT1	switching output IO-Link
OUT2	switching output
	colours to DIN EN 60947-5-2
	Core colours :
BK =	black
BN =	brown
BU =	blue
WH =	white