DP2402

Pulse stretcher

Monitoring Display-Pulse ext

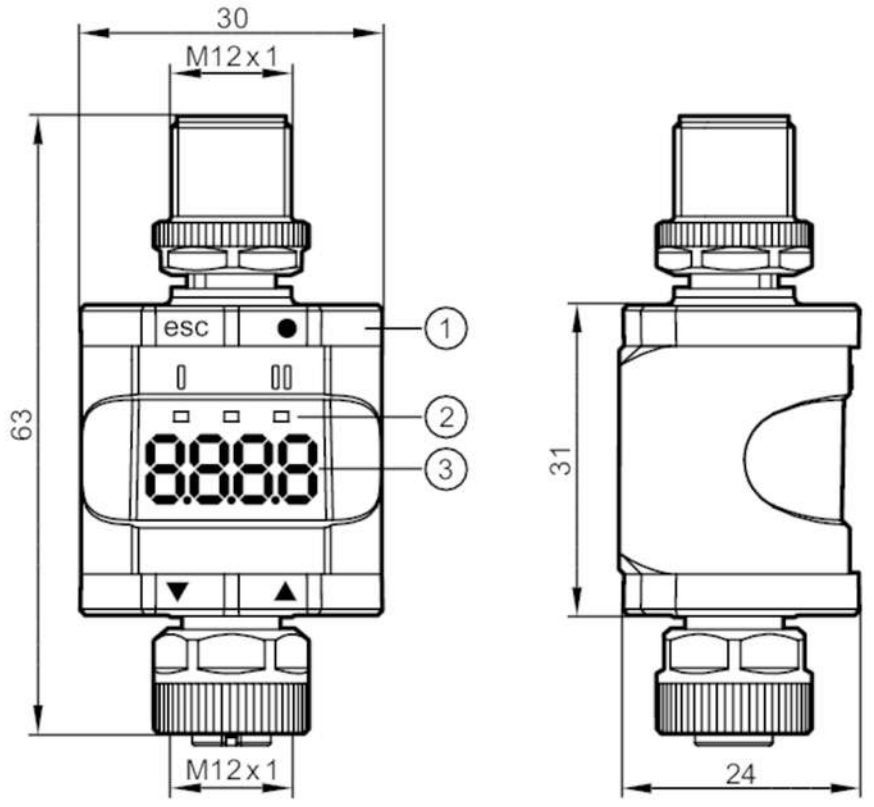

1 push ring
2 LEDs
3 Display

Product characteristics		
Electrical design		PNP
Output function		normally open / normally closed; (parameterisable)
Communication interface		IO-Link
Housing		rectangular
Dimensions	[mm]	63 x 30 x 24
Electrical data		
Operating voltage	[V]	18...30 DC; (to SELV/PELV)
Nominal voltage DC	[V]	24
Current consumption	[mA]	< 380
Max. current load total	[A]	0.2
Inputs / outputs		
Number of inputs and outputs		Number of digital inputs: 2; Number of digital outputs: 2
Inputs		
Number of digital inputs		2; (IEC61131-2)
Input current limitation	[mA]	200
Outputs		
Electrical design		PNP
Number of digital outputs		2

DP2402

Pulse stretcher

Monitoring Display-Pulse ext

Output function		normally open / normally closed; (parameterisable)	
Short-circuit proof		yes	
Measuring/setting range			
Sampling rate	[Hz]	< 2000	
Interfaces			
Communication interface		IO-Link	
Usage type		parameter setting	
Transmission type		COM2 (38,4 kBaud)	
IO-Link revision		1.1	
SDCI standard		IEC 61131-9	
SIO mode		yes	
Required master port type		A	
Process data binary		2	
Supported DeviceIDs		**Type of operation**	**DeviceID**
		default	1168
Operating conditions			
Ambient temperature	[°C]	-25...60	
Note on ambient temperature		2000 m: -25...60 °C	
		3000 m: -25...53 °C	
		4000 m: -25...51 °C	
		Bei folgender Betriebshöhe ist das Derating der Umgebungstemperatur in der Betriebsanleitung zu beachten: > 2000 m	
Storage temperature	[°C]	-25...60	
Max. relative air humidity	[%]	90; (linearly decreasing to 50 % (40 °C) non condensing)	
Max. height above sea level	[m]	4000	
Protection		IP 67	
Pollution degree		2	
Tests / approvals			
MTTF	[years]	317	
Mechanical data			
Weight	[g]	84.2	
Weight (without accessories and packaging)	[g]	35	
Housing		rectangular	
Dimensions	[mm]	63 x 30 x 24	
Materials		housing: PA	
Displays / operating elements			
Display		operation	1 x LED, green
		switching output	2 x LED, yellow
			7-segment LED display, red
Operating elements		2	push ring
Accessories			
Accessories (optional)		mounting clip	
Remarks			
Remarks		For further information please see the operating instructions.	

DP2402

Pulse stretcher

Monitoring Display-Pulse ext

Pack quantity	1 pcs.

Electrical connection - plug



1: L+	
2: OUT2	DO2
3: L-	
4: OUT1	IO-Link / DO1

Electrical connection - socket

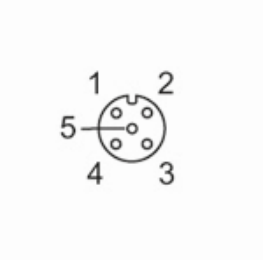

1: L+	
2: IN2	DI2
3: L-	
4: IN1	DI1
5:	n.c.

Other data

switch-on/switch-off delay	0...9999 ms