O4S200

Through-beam sensor transmitter

O4S-OOKG/US100

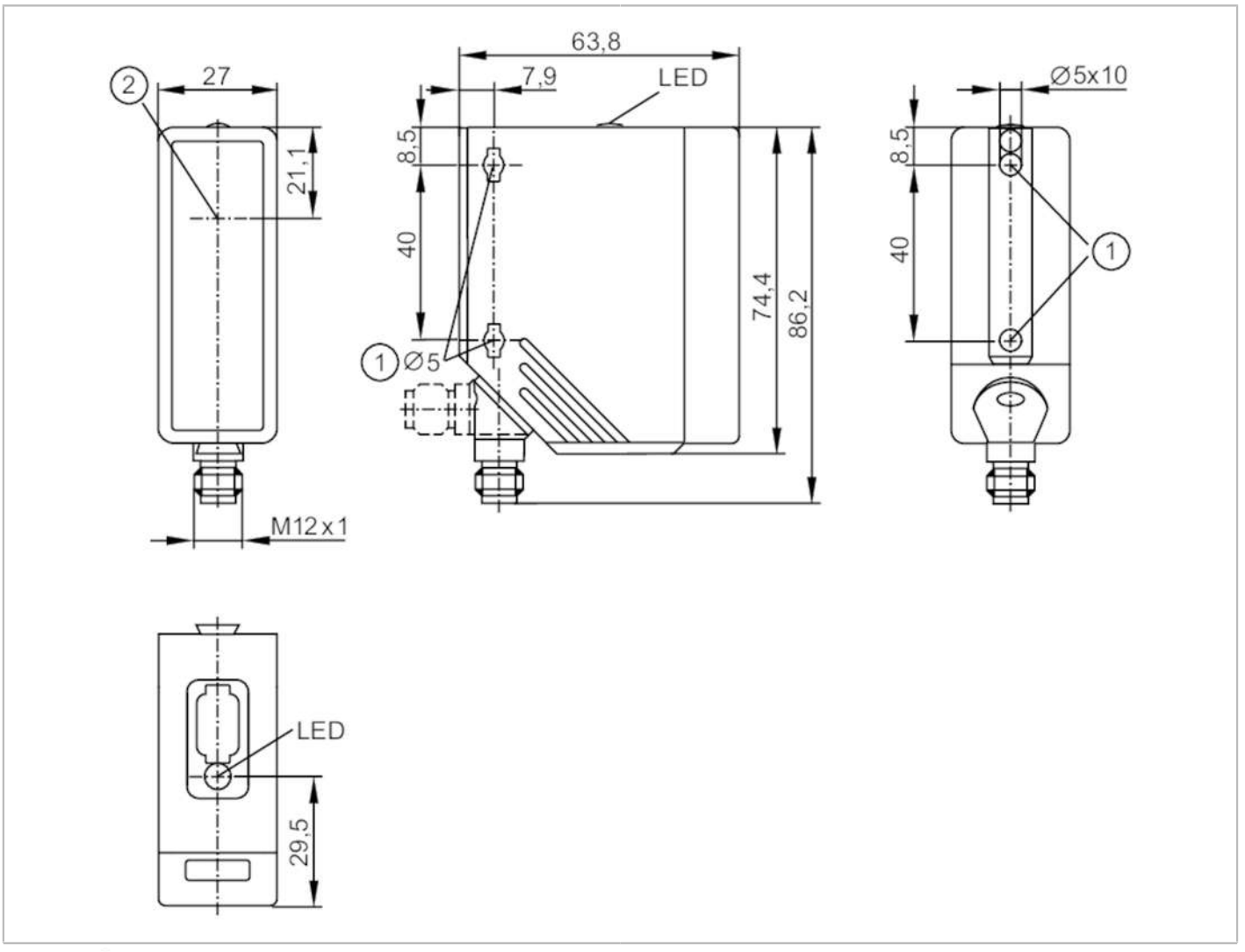

Product characteristics		
Type of light		red light
Housing		rectangular
Application		
Function principle		Through-beam sensor
Electrical data		
Operating voltage	[V]	10...36 DC; ("supply class 2" to cULus)
Current consumption	[mA]	20
Protection class		II
Reverse polarity protection		yes
Type of light		red light
Wave length	[nm]	624
Outputs		
Overload protection		yes

O4S200

Through-beam sensor transmitter

O4S-OOKG/US100

Detection zone			
Transmitter / receiver		transmitter	
Range	[m]	0...50	
Range adjustable		no	
Max. light spot diameter	[mm]	1000	
Light spot dimensions refer to		at maximum range	
Operating conditions			
Ambient temperature	[°C]	-25...60	
Protection		IP 67	
Tests / approvals			
EMC		EN 60947-5-2	
MTTF	[years]	760	
Mechanical data			
Weight	[g]	116.5	
Housing		rectangular	
Dimensions	[mm]	74.4 x 27 x 63.8	
Materials		housing: PA; bezel: stainless steel; LED window: PC	
Lens material		PMMA	
Lens alignment		side lens	
Displays / operating elements			
Display		operation	1 x LED, green
Remarks			
Pack quantity		1 pcs.	
Electrical connection			

Connector: 1 x M12; coding: A



O4S200

Through-beam sensor transmitter

O4S-OOKG/US100

Connection

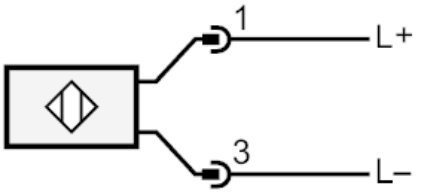

Diagrams and graphs

excess gain graph

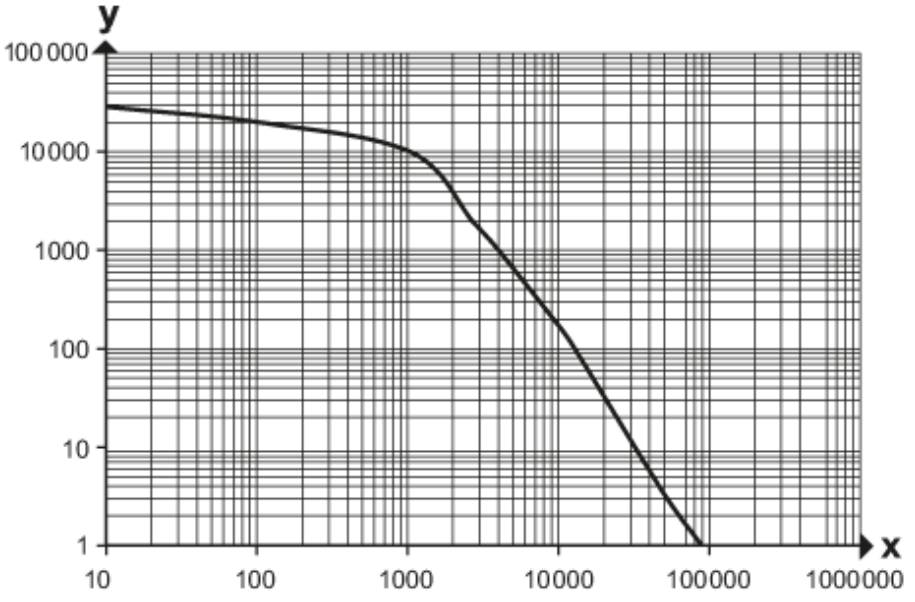

x: Abstand [mm]

y: Funktionsreservefaktor