MURR ELEKTRONIK
stay connected

M8 FEMALE FLANGE PLUG A CODED FRONT MOUNT

PP-wires 4x0.25 0.5m

Flange M8 female
with multi-strand wire
4-pole

Link to Product

Illustration

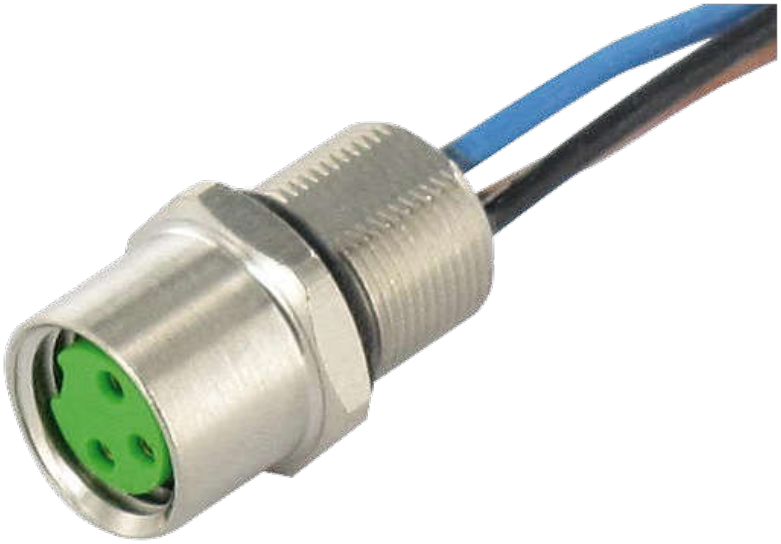

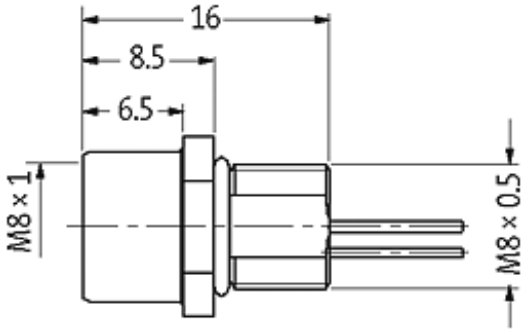

The information in this brochure has been compiled with the utmost care.
Liability for the correctness completeness and topicality of the information is restricted to gross negligence. Version: 11/14

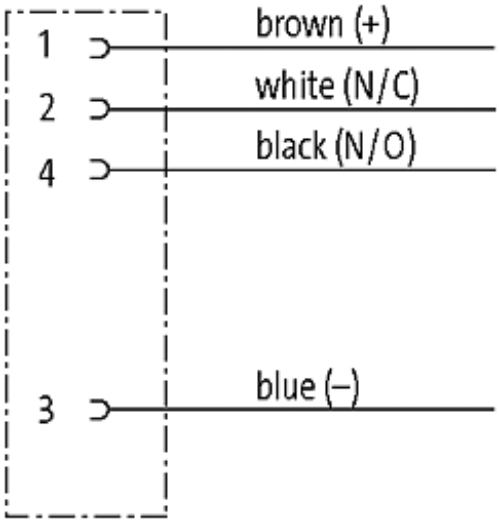

Female

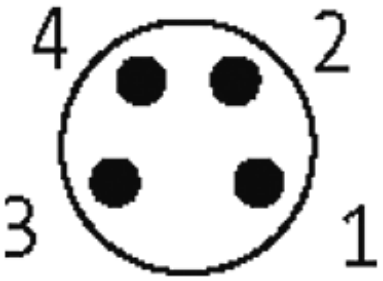

Product may differ from Image

Form	
	08581
Technical Data	
Operating voltage	max. 30 V AC/DC
Operating current per contact	max. 4 A
Locking of ports	Screw thread M8 × 1 mm (recommended torque 0.4 Nm) self-securing
Protection	IP67 inserted and tightened (EN 60529)
Cables	
Cable number	969
No./diameter of wires	4 × 0.25 mm²
Wire isolation	PP (br, wh, bl, bk)
Shore hardness outer jacket	70 ± 5D
Outer diameter	approx. 1.25 mm
Bend radius (fixed)	5 × outer diameter

The information in this brochure has been compiled with the utmost care.
Liability for the correctness completeness and topicality of the information is restricted to gross negligence. Version: 11/14

Bend radius (moving)	10 × outer diameter
Temperature range (fixed)	-40...+80 °C
Temperature range (mobile)	-25...+80 °C
General data	
Temperature range	-25...+85 °C
Commercial data	
country of origin	DE
customs tariff number	85444290
minimum order quantity	1

The information in this brochure has been compiled with the utmost care.
Liability for the correctness completeness and topicality of the information is restricted to gross negligence. Version: 11/14