Brand of NTN corporation

Technical data

UCP316

Bearing units



Grey cast housing, radial insert ball bearing with socket set screws,seal with slinger

KIT CONTENT

UC.316.G2, P316

VISUAL (S)

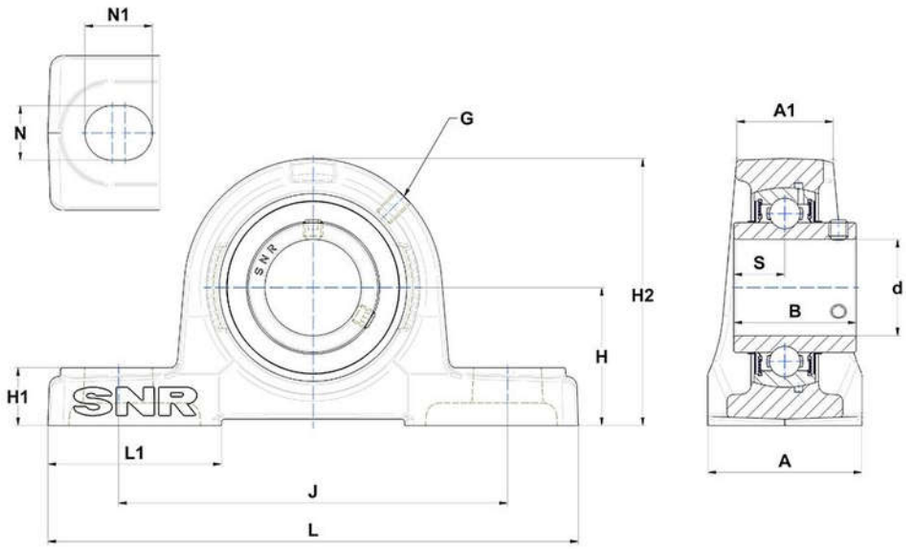

PRODUCT DEFINITION

Brand	SNR
A - Housing width	110 mm
A1 - Housing top width	66 mm
B - Width of Inner Ring	86 mm
d - Shaft diameter	80 mm
G - Grease fitting	M10x1

PRODUCT DEFINITION	
H - Distance mounting base to centerline spheric. seating diam.	106 mm
H1 - Housing foot height	40 mm
H2 - Housing height	210 mm
J - Mounting holes distance	300 mm
L - Housing length	400 mm
L1 - Housing foot length	110 mm
N - Mounting hole dimension	27 mm
N1 - Mounting hole length	40 mm
S - Distance front side/bearing centre	34 mm

PRODUCT PERFORMANCE	
C - Dynamic load rating	122850000 mN
C0 - Static load rating	86500000 mN
Operating temperature min.	253,15 °K
Operating temperature max.	373,15 °K

OTHER FEATURES	
Mass	18,87 kg
Recommended tightening torque for set screw	42 N-m