Midi Horns and Sirens / Signal Horn 570

Signal horn WM Contin. tone 230VAC GY



Part No.: 570.052.68

MECHANICAL DATA	
Length	152 mm
Height	360 mm
Diameter	148 mm
Materials	PC/ABS
Housing colour	Grey
Protection category	IP55
Connection	Screw terminals
cross-sectional area maximum	2,50mm² / 14AWG
Cable entry	Through hole
Cable entry maximum	d = 10 mm
Type of fixing	Wall mounting
Working temperature minimum	-20°C
Working temperature maximum	+60°C
Weight with packaging	1038 g
Product weight	860 g

ELECTRICAL DATA	
Operating voltage	230V
Operating voltage type	AC
Operating voltage frequency	50Hz
Operating voltage tolerance	+/- 10%
Rated operational voltage	230 VAC
Rated operational current	70 mA
Rated inrush current	<500mA
Protection class	Protection class 2
Pollution degree	3
Overvoltage category	II
Isolation voltage	Ui = 250V; Uimp = 2.500V

ACUSTICAL DATA	
Volume (max) at 1m distance	108,0 dB (A)
Acoustic signal image	Continuous tone
Acoustic service life	250 h minimum

APPROVAL DATA	
Conforms with CE	Yes
WEEE	Yes
Conform with ATEX-directive	No
Conforms with CCC	No

! For additional installation and mounting information, refer to the appropriate user guide at www.werma.com. This printed copy is for information only and is subject to alteration.

Midi Horns and Sirens / Signal Horn 570

Signal horn WM Contin. tone 230VAC GY

Conforms with UL	No
Conforms with FCC	No
Conforms with IC	No
EAC certificate available	Yes
Conforms with AS-I	No
ICAO Certification	No
Conforms with GL	No
Conforms with RoHS CN	No
Conforms with VdS	No

DRAWING

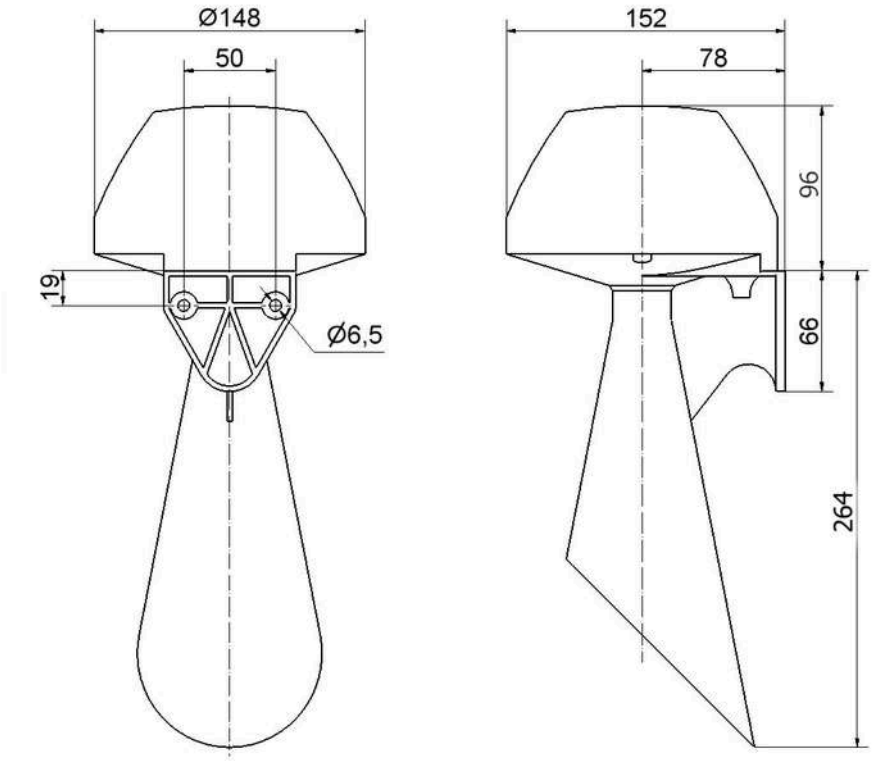

! For additional installation and mounting information, refer to the appropriate user guide at www.werma.com. This printed copy is for information only and is subject to alteration.