Capacitive switch



CHS1



CHS2



CHS3

See below:
Approvals and Compliances

Description

- Capacitive switch
- Perfect sensitivity
- Multicolor illumination
- Standard Sensitivity for glass thickness of up to 2mm
- Quick and easy installation behind non-conductive materials (glass, plastic, wood,...)

Unique Selling Proposition

- Allows free design, invisible installation
- Fully potted for harshest conditions
- Small mounting depth
- Easy and hygienic cleaning

Characteristics

- Water tolerant
- Illumination area
- Wearless, no moving parts
- Wiping tolerant / Easy to clean
- 3M Adhesive transfer tape 468MP

Other versions on request

- CHS2 / CHS3 without illumination or programmed light settings
- Sensitivity adjustments for other materials and thicknesses
- Switching type latching

Weblinks

pdf data sheet, html datasheet, General Product Information, CAD-Drawings, Product News, Detailed request for product

Technical Data

Electrical Data	
Supply Voltage	5 - 28 VDC
Current Consumption all LEDs	adjustable by the customer
Reverse Polarity Protection	Yes
Short Circuit Protection	Yes
Lifetime	> 100 million actuations

Mechanical Data	
Actuation Type	capacitive
Actuating Force	none
Climatical Data	
Operating Temperature	-40 to 85 °C
Storage Temperature	-40 to 85 °C

Approvals and Compliances

Detailed information on product approvals, code requirements, usage instructions and detailed test conditions can be looked up in Details about Approvals

SCHURTER products are designed for use in industrial environments. They have approvals from independent testing bodies according to national and international standards. Products with specific characteristics and requirements such as required in the automotive sector according to IATF 16949, medical technology according to ISO 13485 or in the aerospace industry can be offered exclusively with customer-specific, individual agreements by SCHURTER.

Compliances

The product complies with following Guide Lines

Identification	Details	Initiator	Description
CE	CE declaration of conformity	SCHURTER AG	The CE marking declares that the product complies with the applicable requirements laid down in the harmonisation of Community legislation on its affixing in accordance with EU Regulation 765/2008.
UKCA	UKCA declaration of conformity	SCHURTER AG	The UKCA marking declares that the product complies with the applicable requirements laid down in the British Amendment of Regulation (EC) 765/2008.
RoHS	RoHS	SCHURTER AG	Directive RoHS 2011/65/EU, Amendment (EU) 2015/863
REACH	REACH	SCHURTER AG	On 1 June 2007, Regulation (EC) No 1907/2006 on the Registration, Evaluation, Authorization and Restriction of Chemicals 1 (abbreviated as "REACH") entered into force.

Dimension [mm]
CHS1

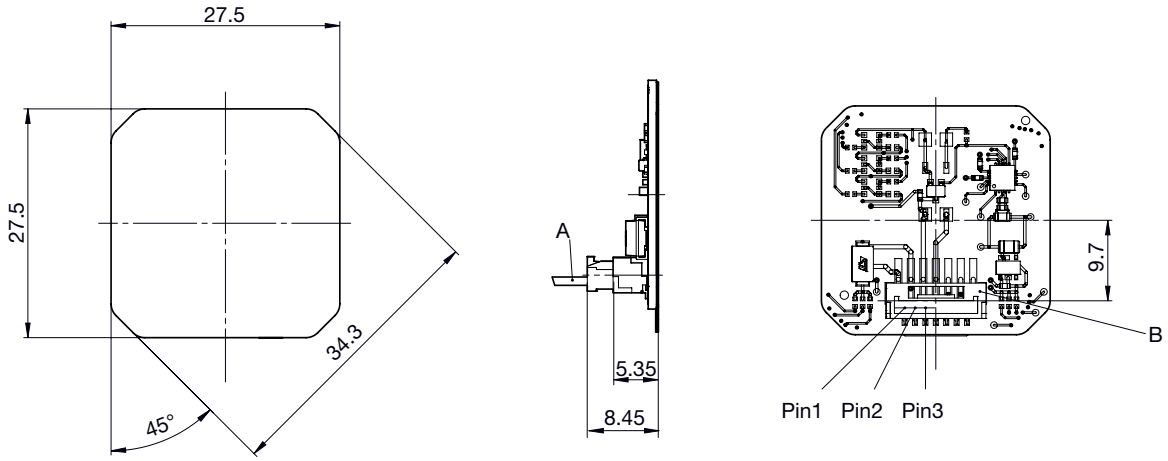

A: Stranded
B: Suitable for connector JST GHR-07V-S

CHS2

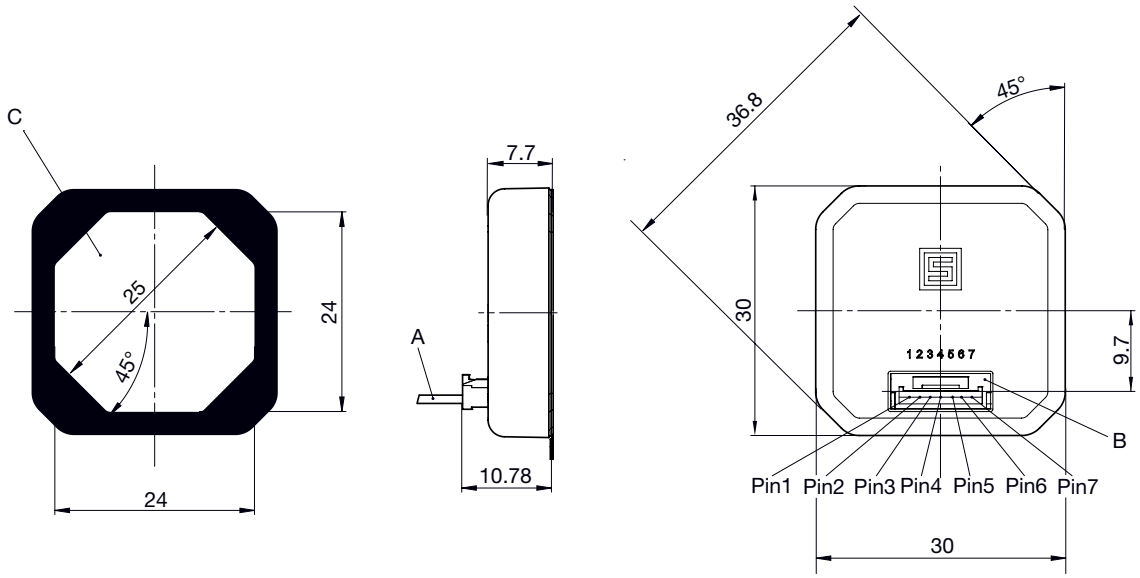

A: Stranded
B: Suitable for connector JST GHR-07V-S
C: Illumination area

CHS3

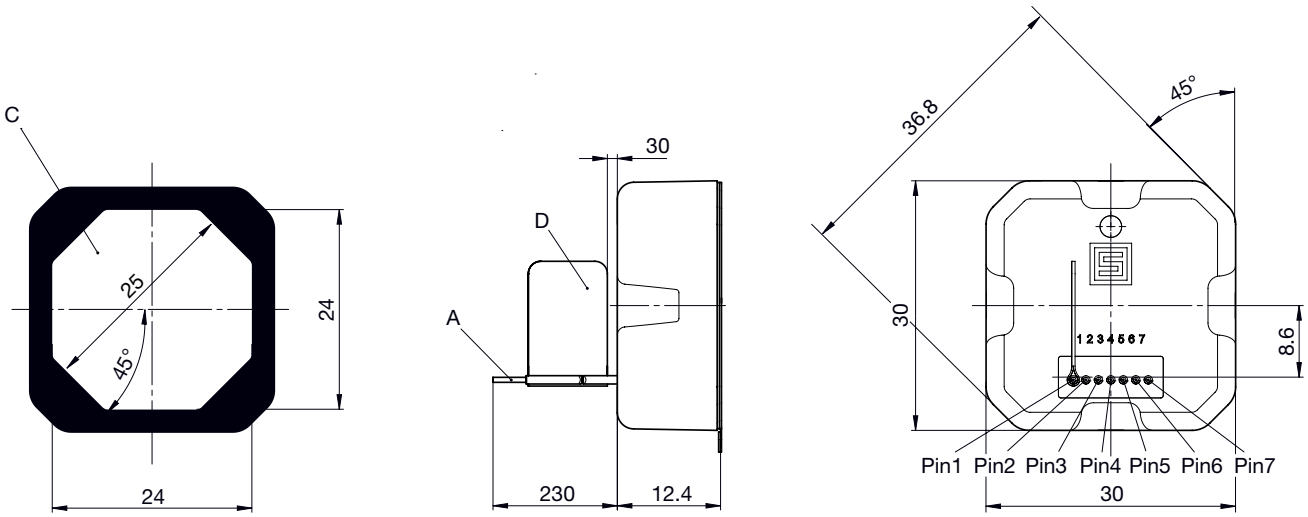

A: Stranded
C: Illumination area
D: Label

Accessories
Cable CHS1

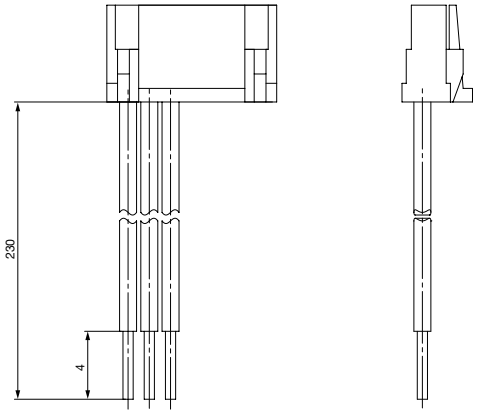

Accessories
Cable CHS2

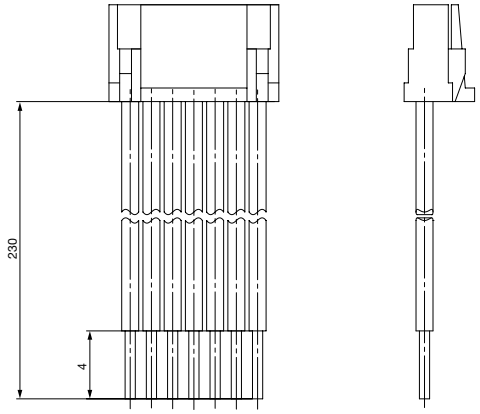

Diagrams

Connection scheme CHS1
(Without illumination)

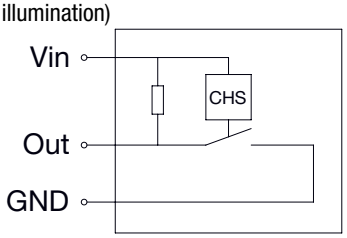

Technical Data

Connection assignment		
PIN-number	Wire color	function
1	brown BN	Vin = 5 VDC...28 VDC
2	black BK	GND
3	white WT	Out

Connection scheme CHS2 and CHS3
(With illumination)

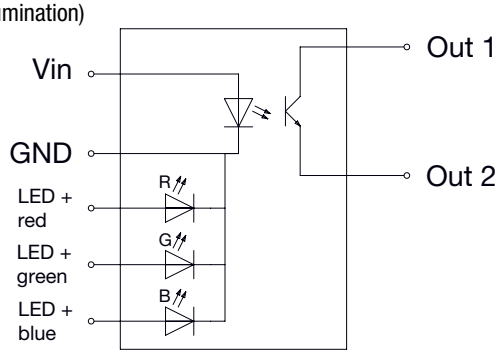

Connection assignment		
PIN-number	Wire color	function
1	brown BN	Vin = 5 VDC...28 VDC
2	black BK	GND
3	white WT	Out 1
4	white WT	Out 2
5	red RD	LED red
6	green GN	LED green
7	blue BL	LED blue

	Rated Current [A]	Switching Voltage	Output resistance off	Output resistance on	Output type
			[MΩ]	[Ω]	
CHS1	30mA	70 VAC / 100 VDC	>10	<0.15	Open collector (30mA)
CHS2	100mA	42 VAC / 60 VDC	>10	<16	OptoMOS Relay (100mA, polarity free)
CHS3	2A	40 VAC / 40 VDC	>1000	<10	MOS FET (2A, polarity free)

Illumination area

Operating Data	Forward Voltage	Nominal LED current
LED red	2.1 V	20 mA
LED green	3.0 V	20 mA
LED blue	3.1 V	20 mA
PWM frequency LED: max. 100Hz		
Power consumption without lighting: < 1mA	(Output contact open)	
Power consumption without lighting: < 6mA	(Output contact closed)	

C	H	S	-	3	0	-	M	O	N	O	0	2	A	F	0	-	A	I	R	G	B	V	A	R	F	0	-	P	4	B	K	P	-	G	0	2	0
				1			2		3		4			5			6		7			8			9			10			11		12			13		14	

* Please note that only the configuration below are available by default.
Other configurations on request

Order number	Type	Configuration code
3-132-513	CHS 1	CHS-30-MONOA03C0-0000000000-0000P-G020
3-132-515	CHS 2	CHS-30-MONOA10C0-AIRGB00RC0-P4BKP-G020
3-132-516	CHS 3	CHS-30-MONO02AF0-AIRGB00RF0-P4BKP-G020

Dimensions L x B x H [mm] — 1

CHS 1	=	30 x 30 x 5.35
CHS 2	=	30 x 30 x 10.78
CHS 3	=	30 x 30 x 12.4

Switching type — 2

Push button	=	MO

Switch function — 3

Normally open	=	NO

Rated current — 4

2A	=	02A
100mA	=	A10
30mA	=	A03

Terminal switch — 5

Flexible wires	=	F0
Connector integrated	=	C0

Illumination type — 6

Area illumination	=	AI
No illumination	=	00

Illumination color — 7

Multicolor	=	RGB
None	=	000

Supply voltage illumination — 8

w/o resistor	=	00R
None	=	000

Terminal illumination — 9

Flexible wires	=	F0
Connector integrated	=	C0
None	=	00

Housing material — 10

Lexan Resin EXL9330	=	P4

Housing color — 11

Black	=	BK
None	=	00

Mounting — 12

Adhesive	=	P

Front panel material — 13

Float glass	=	G0

Front panel thickness — 14

2mm	=	20

All Variants

Designation	Rated Current [A]	Illumination	Switching Voltage	Config. Code	Order Number
CHS1	30mA	non-illuminated	70 VAC / 100 VDC	CHS-30-MONOA03C0-0000000000-0000P-G020	3-132-513
CHS2	100mA	Area illumination	42 VAC / 60 VDC	CHS-30-MONOA10C0-AIRGB00RC0-P4BKP-G020	3-132-515
CHS3	2A	Area illumination	40 VAC / 40 VDC	CHS-30-MONO02AF0-AIRGB00RF0-P4BKP-G020	3-132-516

Availability for all products can be searched real-time:https://www.schurter.com/en/Stock-Check/Stock-Check-SCHURTER

Packaging unit 10

Accessories

	Description
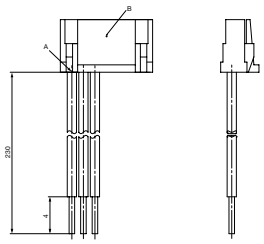	Cable to CHS1 3-134-545
	Cable to CHS2 3-134-544

12.01.2022

The specifications, descriptions and illustrations indicated in this document are based on current information. All content is subject to modifications and amendments. Information furnished is believed to be accurate and reliable. However, users should independently evaluate the suitability and test each product selected for their own applications.