WIRING DIAGRAM

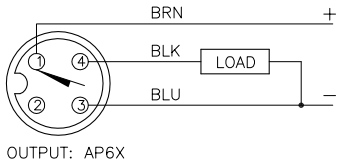

SHORT–CIRCUIT AND OVERLOAD PROTECTED

LOCKNUT LN–SS12

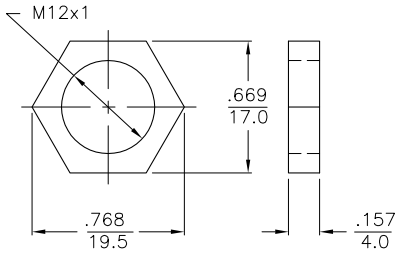

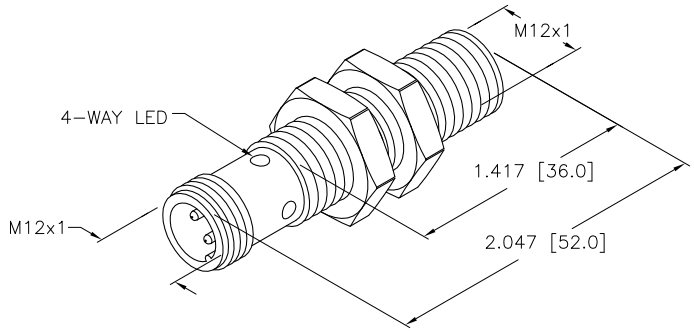

SPECIFICATIONS

RATED OPERATING DISTANCE	4mm =.158"
MOUNTING MODE	FLUSH
MIN. REPEAT ACCURACY	≤ 2%
TEMPERATURE DRIFT	≤ ±10%
HYSTERESIS (SWITCHING DISTANCE)	3–15%
OPERATING TEMPERATURE	–30°C to +85°C (–22°F to +185°F)
RATED OPERATIONAL VOLTAGE	10–30 VDC
MAX. RIPPLE	≤10%
RATED OPERATIONAL CURRENT	≤ 200 mA
NO–LOAD CURRENT	≤ 15 mA
MAX. OFF–STATE CURRENT	≤ 0.1 mA
RATED INSULATION VOLTAGE	≤ 0.5 kV
SHORT–CIRCUIT PROTECTED	YES
MAX. VOLTAGE DROP	≤ 1.8 V
REVERSE POLARITY PROTECTION	INCORPORATED
WIRE–BREAK PROTECTION	INCORPORATED
OUTPUT FUNCTION	NORMALLY OPEN, 3–WIRE, PNP
MAX. SWITCHING FREQUENCY	≤ 2 kHz
HOUSING MATERIAL	METAL, A2 1.4301 (AISI 304)
ACTIVE FACE	PLASTIC, LCP–GF30
CONNECTION	M12x1
SHOCK RESISTANCE	30 g, 11 ms
VIBRATION RESISTANCE	55 Hz, 1 mm AMPLITUDE (IN ALL 3 PLANES)
DEGREE OF PROTECTION	IP68
SWITCHING STATUS INDICATION	LED: YELLOW

SOURCE DRAWING - FOR REFERENCE ONLY

REV	DESCRIPTION	BY	DATE	ECO NO.
A	DRAWING RELEASE	RDS	05/09/06	

RELATED DOCUMENTS
1.
2.
3.
4.

3RD ANGLE PROJECTION

THIS DRAWING IS PROPERTY OF TURCK INC. USE OF THIS DOCUMENT WITHOUT WRITTEN PERMISSION IS PROHIBITED.

TURCK INC
High Technology Sensors and Automation Controls
3000 CAMPUS DRIVE
MINNEAPOLIS, MN 55441
1–800–544–7769
(763) 553–7300
(763) 553–0708 fax
turck.com

MATERIAL

FINISH

ALL DIMENSIONS DISPLAYED ON THIS DRAWING ARE FOR REFERENCE ONLY

CONTACT TURCK FOR MORE INFORMATION

DRFT RDS | DATE 05/08/06
DSGN TB | SCALE 1=1.0

UNIT OF MEASUREMENT
INCH [MILLIMETER]
DO NOT SCALE THIS DRAWING

DESCRIPTION
BI 4U–EM12–AP6X–H1141

IDENTIFICATION NO. M1634807
REV A

FILE: M1634807
SHEET 1 OF 1