E21269

Reflector for retro-reflective sensors

REFLECTOR TS-48X48 SC

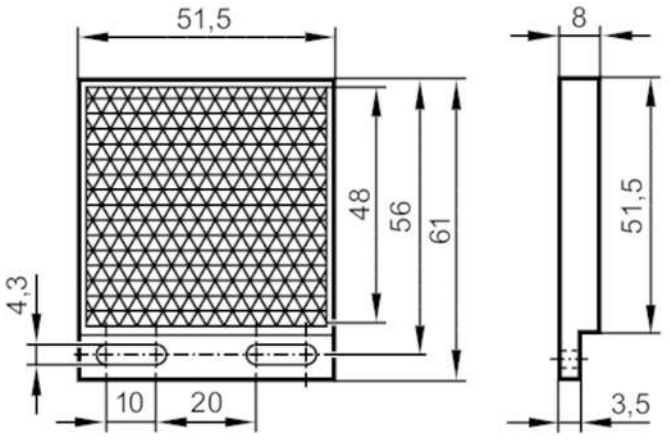

Application		
Design		for hygienic and wet areas in the food industry, rectangular, for red light and infrared light retro-reflective sensors
Operating conditions		
Ambient temperature	[°C]	-20...140
Mechanical data		
Weight	[g]	17.5
Dimensions	[mm]	61 x 51.5 x 8
Reflector surface	[mm]	48 x 48
Materials		Solidchem
Remarks		
Pack quantity		1 pcs.