MOFLASH SIGNALLING

LED80 ECO



Overview

VISUAL SIGNALS - INDUSTRIAL - LED ECO BEACONS

The LED80 ECO Series incorporates 12 ultra bright Surface Mount LEDs, offering an economic solution for a wide range of general signalling solutions. Ideally suited for local indication, the Beacon is controlled using either two wires for **Flashing Mode** or three wires for **Static Mode.**

The Beacon is supplied fully assembled, ready for immediate installation and offers three mounting options: Surface, Conduit Box or Wall Mounting, using the two-piece fixing plate supplied. One plate is fixed to the appropriate surface, the other to the Beacon. The two plates then 'Snap Fit' together to complete the installation.

Please note, the mounting plate supplied is optional, as it is not required for surface/panel mounting. However, it is required when the Beacon cannot be mounted directly to a surface using the two studs located on the Base.

Features

- Continuously rated
- Flashing or Static
- Low current consumption
- Suitable for Stud Mount, Surface Mount or Conduit Box
- 120° light output around the vertical axis
- Available in 10-100vDC and 115-230vAC

Material

- UV Stable Polycarbonate Lens
- UV Stable ABS Plastic Base

IP 67

12 SMT LED

60 FPM*

-25 to +55°C

50/60Hz

*4 Rapid Flashes Per 1Hz Cycle

APPROVALS & CONFORMITIES

UK CA CE RoHS

ISSUE 1

uksales@moflash.co.uk
moflashkm@moflash.com
exportsales@moflash.co.uk

11 Upper Conybere Street
Highgate, Birmingham
B12 0EB, England

UK +44(0)121 446 5322
FR +33(0)1 70 72 12 71

www.moflash.com

Ordering Information

Voltage	Ordering Information				Mode & Current Consumption	
Voltage Range	Amber	Red	Blue	Green	Flashing	Static
10-100vDC	LED80-02-01	LED80-02-02	LED80-02-03	LED80-02-04	22mA @24vDC	20mA @24vDC
115-230vAC	LED80-04-01	LED80-04-02	LED80-04-03	LED80-04-04	10mA @230vAC	9mA @230vAC

Effective Candela (Cd) - Formula Blondel-Rey			
Amber	Red	Blue	Green
5.67	3.04	2.12	3.83

Weights & Dimensional Drawings

Kg	10-100v	115-230v
Net Weight	0.127	0.138
Gross Weight	0.140	0.152

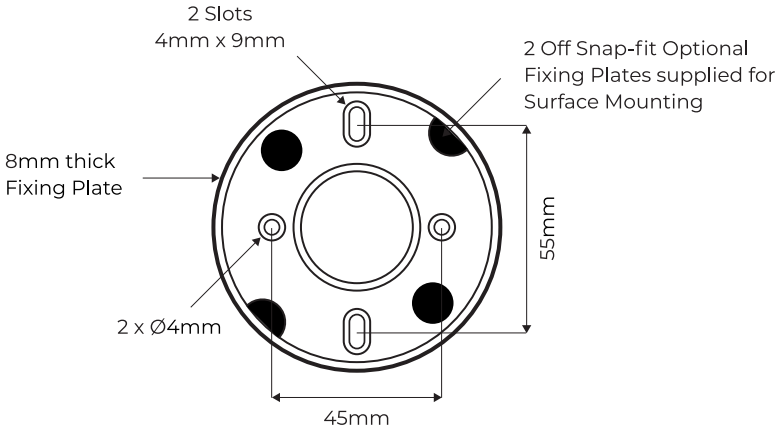

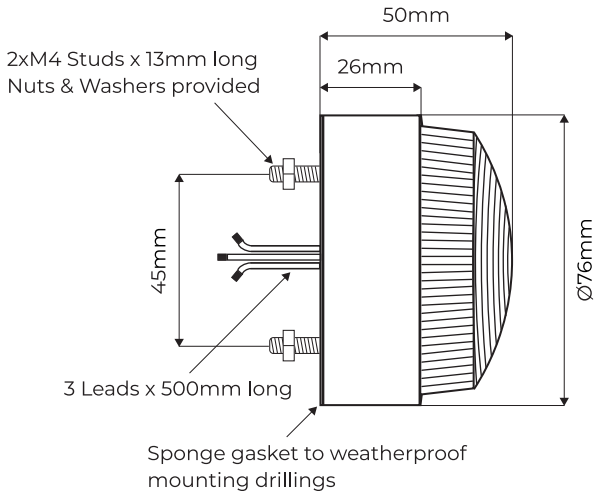

uksales@moflash.co.uk
moflashkm@moflash.com
exportsales@moflash.co.uk
UK +44(0)121 446 5322
FR +33(0)1 70 72 12 71
11 Upper Conybere Street
Highgate, Birmingham
B12 0EB, England
www.moflash.com

APPROVALS & CONFORMITIES