TDE Instruments



# Digalox® EX-USB

## Instruction manual (Rev-2024-07)

USB interface for Digalox® DPM72-AV2 and DPM36

**Package contents:** USB interface PCB Digalox® EX-USB,
Instruction manual (DE + EN)

## 1. Safety instructions

- Read instruction manual carefully before operating the device! Keep for later reference.
- Mounting and installation must be carried out by suitably qualified and competent persons only.
- **WARNING: When working on the device hazardous voltages must not be connected to the device!**
- **DANGER: When the USB port is connected, only voltages lower than 50 V may be applied to the measurement inputs. The USB port is not isolated from the measurement circuit.**

## 2. Intended use

- Configuration of Digalox® DPM72-AV2 or DPM36
- Indoor use non condensing, non corrosive.
- Failure to comply with these instructions will void all guarantee and warranty.

## 3. Description

The USB interface is used to connect a Digalox® DPM72-AV2 or DPM36 to a PC. Using the corresponding configuration software, the device can be configured.

In the “Downloads” area of **www.digalox.com** you can find the latest version of the instruction manual and the configuration software.

## 4. Product overview

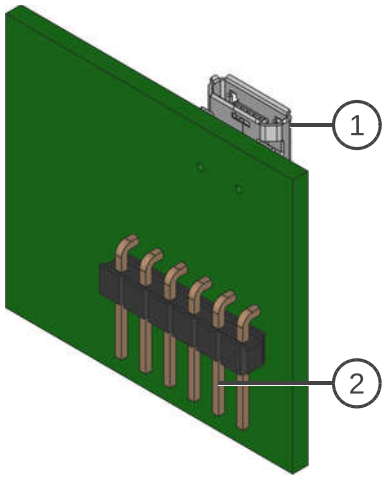


1 USB Micro-B interface

2 Pins to connect to DPM72-AV2 or DPM36

## 5. Mounting onto DPM72-AV2

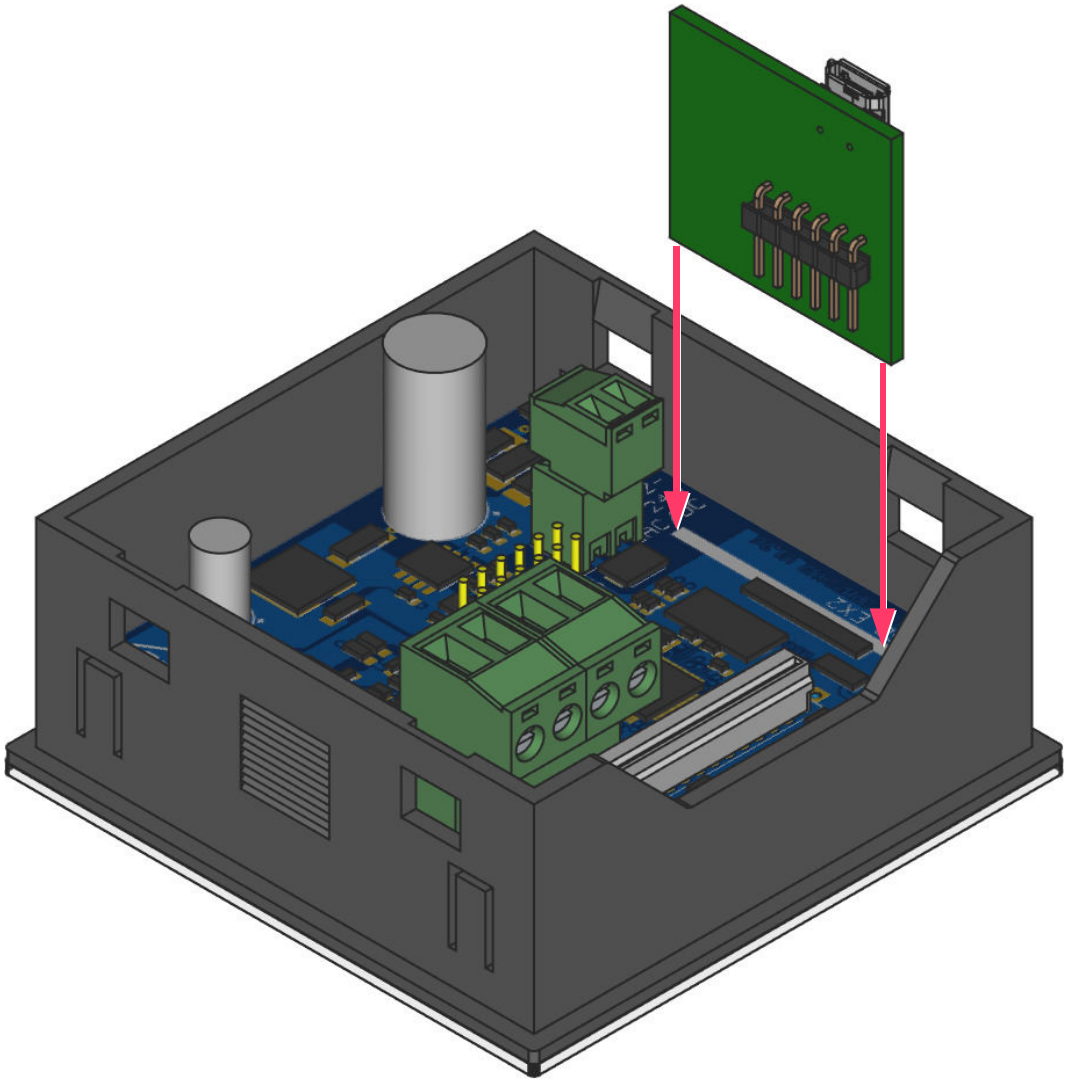

Plug the USB interface card into the position marked “USB EX2” on the circuit board of the Digalox® DPM72-AV2. Make sure that all pins of the card are plugged into the socket. A USB cable with a USB Micro-B plug is required to connect to the PC.

## 6. Mounting onto DPM36

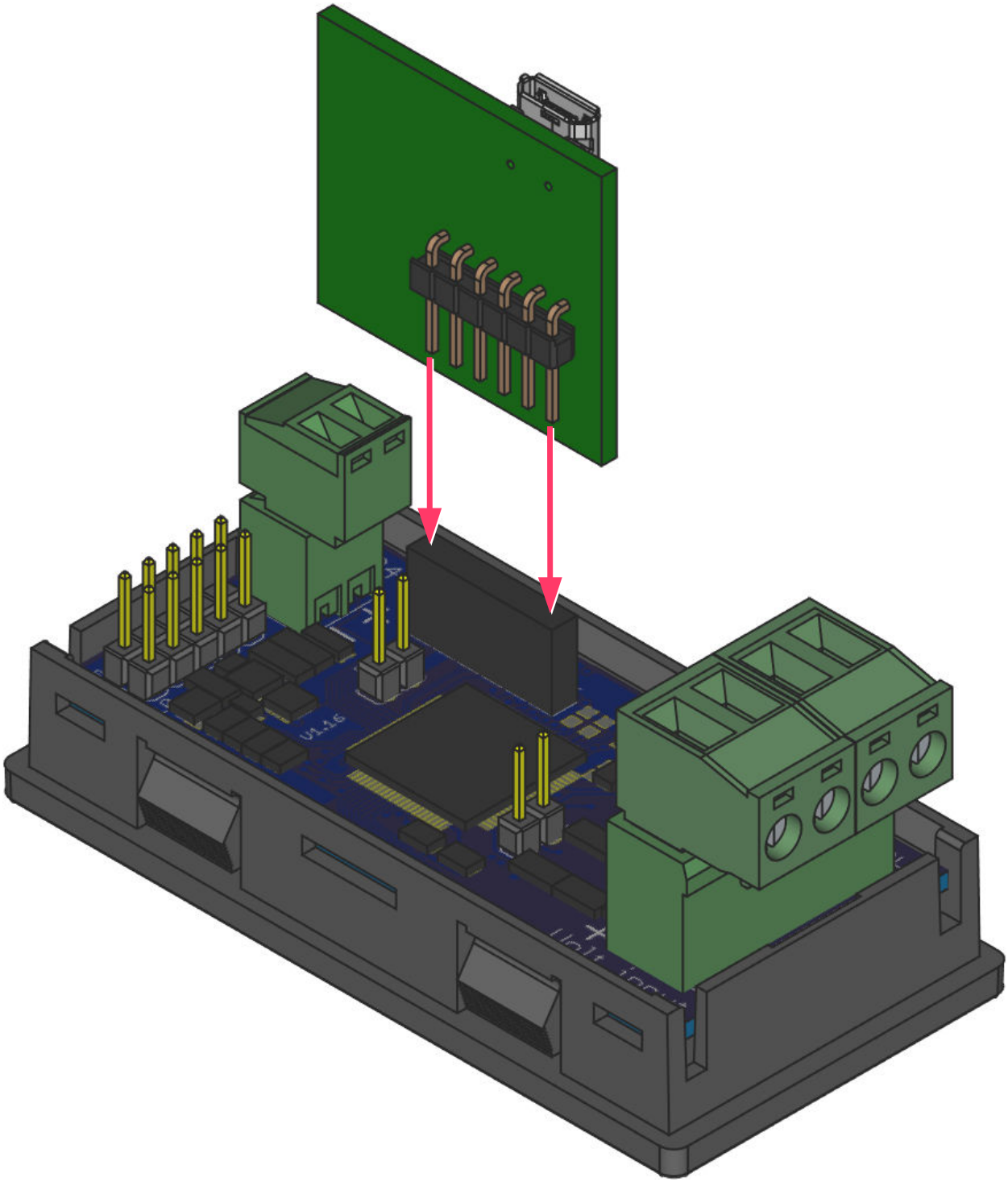

Plug the USB interface card onto the circuit board of the Digalox® DPM36 at the position shown in the diagram. Make sure that all pins of the card are plugged into the socket. A USB cable with a USB Micro-B plug is required to connect to the PC.

## 7. Specification

| | |
|---|---|
| Supply | 5 V |
| Power consumption AV2 | Max. 1.2 W |
| Power consumption DPM36 | Max. 0.6 W |
| Connection (USB) | USB-Micro-B |
| Operating temperature | 0 °C to +50 °C |
| Storage temperature | -20 °C to +70 °C |
| Operating altitude | 0 to 2000 m above sea level |
| IP code | IP00 |
| Dimensions | 28 mm × 30 mm × 8 mm |
| Net weight | 4 g |

## 8. Dimensions [mm]

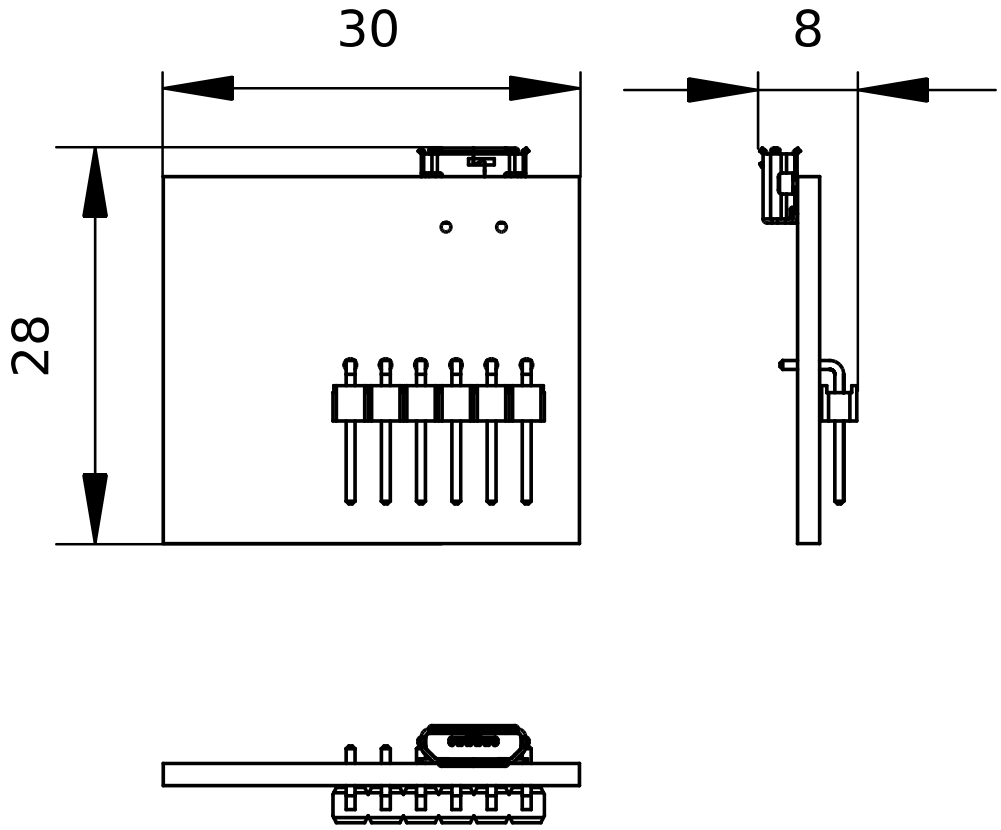


## 9. Contact information

TDE Instruments GmbH, Gewerbestraße 8, D-71144 Steinenbronn
Phone: +49 7157 20801, Technical support: +49 351 84127746
E-mail: info@tde-instruments.de
Internet: www.tde-instruments.de, www.digalox.com