E21145

Angle bracket with mounting clamp

MOUNTING BRACKET+CLAMP M18

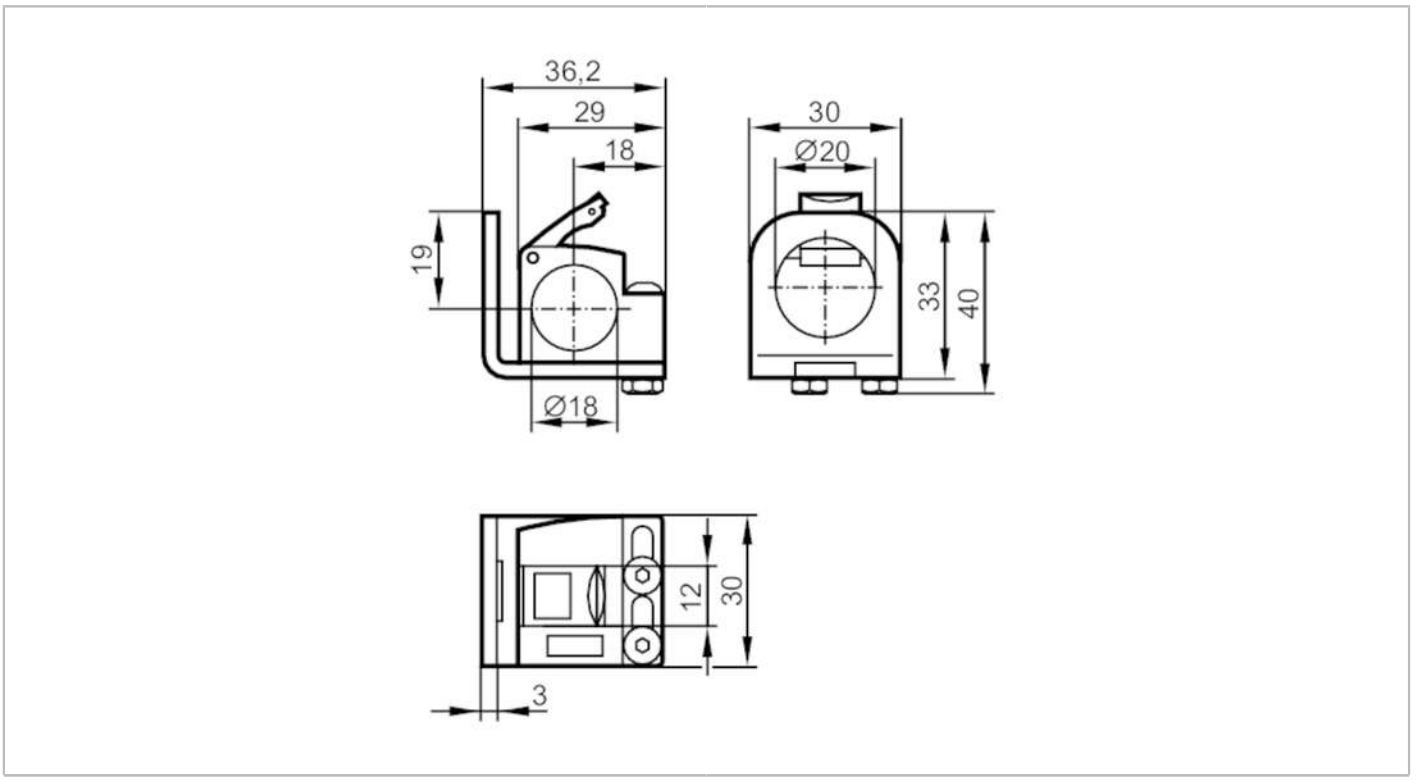

Application		
Design		clamp mounting, with end stop
Mechanical data		
Weight	[g]	63
Dimensions	[mm]	Ø 18
Inside diameter	[mm]	18
Materials		fixture: stainless steel (1.4301 / 304); PC black
Remarks		
Pack quantity		1 pcs.