E43245

Coaxial pipe for level sensors

LR COAX TUBE G3/4 L1000/2BORES

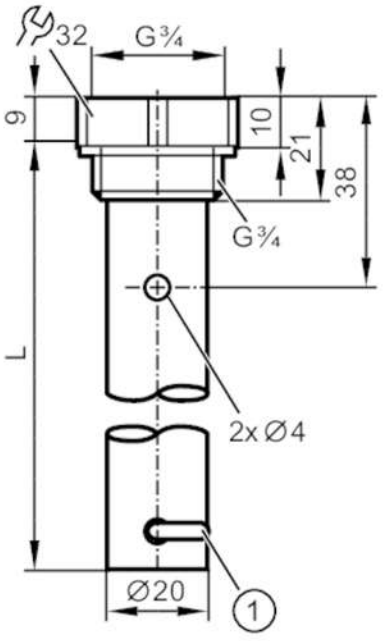

1 fixing bracket for centring piece

Application		
Design		Version without holes, for level sensors, LR
Medium temperature	[°C]	-40...200
Pressure rating	[bar]	16
Vacuum resistance	[mbar]	-1000
Mechanical data		
Weight	[g]	600
Materials		Coaxial pipe: stainless steel (1.4301 / 304); Sealing: NBR reinforced fibre; Centring piece: PPS reinforced fibre; fixing bracket: stainless steel (1.4310 / 301)
Sensor connection		threaded connection G 3/4 external thread
Process connection		threaded connection G 3/4 internal thread
Length	[mm]	1000
Accessories		
Items supplied		Sealing: 1
Accessories (optional)		Centring piece for coaxial pipes: 1, E43222
Remarks		
Pack quantity		1 pcs.