

Bolt Free Machine Mount - For Free-Standing Applications

Facts

- ***Withstands loads up ta 1000 kg per machine mount***
- ***Designed tar applications where a bait hale does not exist or is inaccessible***
- ***Effective vibration damping***
- ***Reduces troublesome noise produced by machinery and equipment***

Bolt Free Machine Mount is a series of machine mounts is specially produced for free-standing applications in which stringent demands are imposed on effective vibration damping and the reduction of troublesome noise emanating from machinery and other equipment. **Bolt Free Machine Mount** is specially desig-ned for applications that do not have bolt holes or, where bolt holes are inaccessible.

Bolt Free Machine Mount consists of a pressure plate coated in friction rubber that rests on a levelling bolt built into a steel chassis and a thick rubber damping element. The design of the mount means that it can withstand most types of grease, acid, oil and coolants that are used in industry.

A tried and tested design with excellent levelling characteristics makes the **Bolt Free Machine Mount** the natural choice for the majority of machine type used in industry, e.g. machine tools, engineering machinery and die and punch machines.

Nuts for adjustng the built in fine threaded levelling bolt

Contact surface coated with a 2 mm layer of high fricton rubber



Integrated damping glement made from impervious rubber

Pressure plate made of galvanized sheet steel

Application areas

- ***Machine tools***
- ***Engineering machinery***
- ***Die and punch machines***

Model	Load range daN (kg) per mount	D1 mm	D2 mm	H mm	B mm	Part no.
FSM 11	50-500	80	60	**55-65**	**30**	**10311**
FSM 12	400-1000	120	80	**67-77**	**36**	**10312**

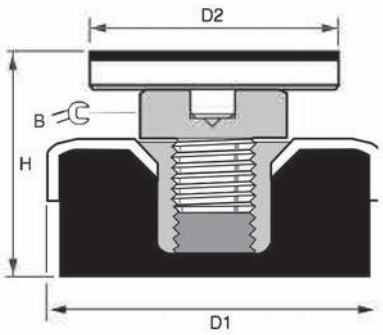

The products presented above form part of the standard range. In order to avoid injury, mounts should be fitted by authorized personnel with the requisite knowledge of the product, its installation and the user environment. We reserve the right make component, colour and design changes without prior notce. This data sheet supersedes all previously published editons.

+44 (0)1296 395400 hello@machinemounts.co.uk www.machinemounts.co.uk

Chapel Offices, Bierton, Bucks, England. HP22 5DW

Registered in England 2485587