E20871

Mounting set for position sensors

SYSTEM COMPONENT M18 ROD

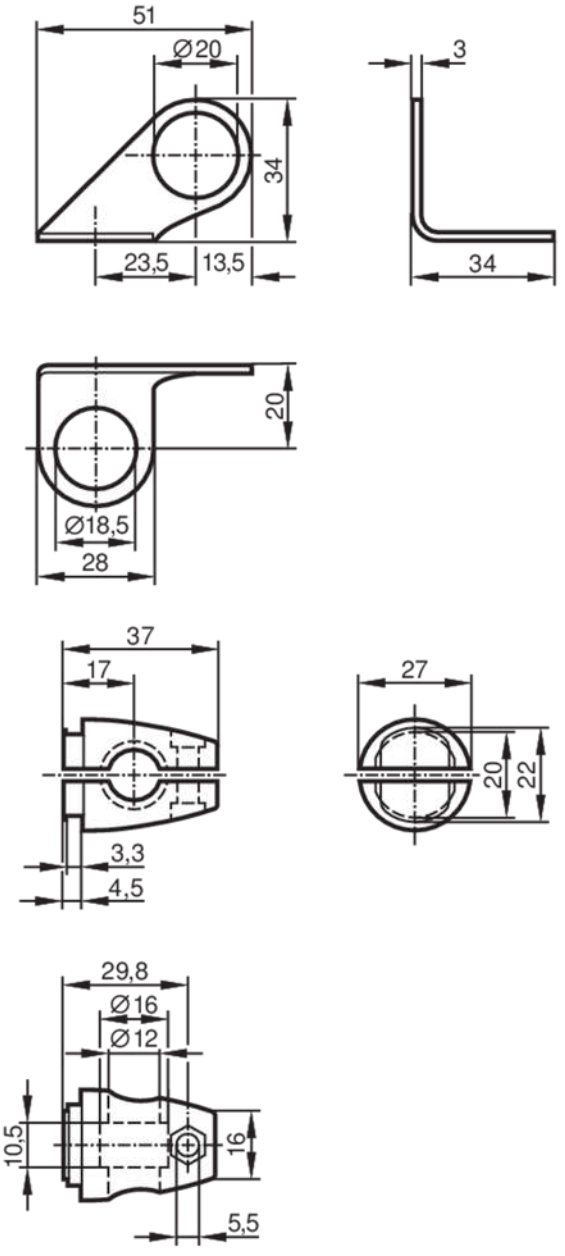

Application		
Design		clamp mounting
Mechanical data		
Weight	[g]	117
Type of mounting		Mounting rod; (Ø 12 mm)
Dimensions	[mm]	Ø 18.5
Materials		fixture: stainless steel (1.4571/316Ti); Clamp: stainless steel (1.4408)
Remarks		
Pack quantity		1 pcs.