

PSEN opII4H Series

PILZ
THE SPIRIT OF SAFETY

- PSEN sensor technology

Operating Manual-1003501-EN-07

This document is the original document.

All rights to this documentation are reserved by Pilz GmbH & Co. KG. Copies may be made for the user's internal purposes. Suggestions and comments for improving this documentation will be gratefully received.

Source code from third-party manufacturers or open source software has been used for some components. The relevant licence information is available on the Internet on the Pilz homepage.

Pilz®, PIT®, PMI®, PNOZ®, Primo®, PSEN®, PSS®, PVIS®, SafetyBUS p®, SafetyEYE®, SafetyNET p®, the spirit of safety® are registered and protected trademarks of Pilz GmbH & Co. KG in some countries.


SD means Secure Digital

Introduction **5**
Validity of documentation 5
Using the documentation 5
Definition of symbols 5

Overview **6**
Unit view 8
Scope of supply 10

Safety **11**
Intended use 11
Safety regulations 12
Safety assessment 12
Use of qualified personnel 12
Warranty and liability 12
Disposal 12

Function description **13**
Basic function 13
Automatic start and restart 13
Operation of two safety light curtains with the same alignment 15

Project configuration **15**
Maintaining the safety distance 15
Resolution 16
Protected field perimeters 16
Ambient conditions 16
Distance from reflective surfaces 17
Minimum distance between parallel, aligned safety light curtains 20
Installation of several adjacent safety light grids 22
Use of deviating mirrors 23
Dead zones 24

Installation and alignment **26**
Attach the safety light curtain to the mounting surface 27
Orientation 30
General guidelines 30
Safety light curtain alignment 31

Wiring **32**
General guidelines 32
Connector pin assignment 33
Earthing the safety light curtain 34

Commissioning **34**
System connection 34
Checking the safety light curtain 36

Operation **38**
Display elements 38
Status information 39
Safety light grid restart 42
Malfunction 42

Regular checks and maintenance **43**
Checks 43
Regular check 43
Checking of safety light curtains with beam coding 43
Check after plant/machine modification 44
Maintenance 45

Dimensions **46**

Technical details Order no. 632060-632062 ..... **48**

Technical details Order no. 632063-632065 ..... **50**

Technical details Order no. 632066-632068 ..... **52**

Technical details Order no. 632069-632071 ..... **55**

Classification according to ZVEI, CB24I **57**

Safety characteristic data **58**

Order reference **59**
Order reference for safety light curtains 59
Order reference for accessories 59
Mirror column set 63
Mirror columns 63
Order reference: Component parts 63

Appendix **65**
Check list 65

EC declaration of conformity **67**

Introduction

Validity of documentation

This documentation is valid for the product PSEN opII4H Series from Version 3.0.

This operating manual explains the function and operation, describes the installation and provides guidelines on how to connect the product.

Using the documentation

This document is intended for instruction. Only install and commission the product if you have read and understood this document. The document should be retained for future reference.

Definition of symbols

Information that is particularly important is identified as follows:



DANGER!

This warning must be heeded! It warns of a hazardous situation that poses an immediate threat of serious injury and death and indicates preventive measures that can be taken.



WARNING!

This warning must be heeded! It warns of a hazardous situation that could lead to serious injury and death and indicates preventive measures that can be taken.



CAUTION!

This refers to a hazard that can lead to a less serious or minor injury plus material damage, and also provides information on preventive measures that can be taken.



NOTICE

This describes a situation in which the product or devices could be damaged and also provides information on preventive measures that can be taken. It also highlights areas within the text that are of particular importance.

INFORMATION

This gives advice on applications and provides information on special features.

Overview

Safety light curtains of the PSEN opII4H Series are electrosensitive protective equipment (ESPE type: 4) in accordance with DIN EN 61496-1 and DIN EN 61496-2 (AOPD) for workspaces in which machines, robots, and automated systems might pose a physical danger to their operators.

Unit features

- Resolution: 30 mm
- Infrared protected field is generated
- LED indicator for status information
- Optical synchronisation of transmitters and receivers
- Beam coding A and B for greater insensitivity (see Installing several safety light curtains in parallel [22])
  - to stray light and short-term interruptions of the protected field
  - to mutual interference when using two safety light curtains with the same alignment
- Connection to evaluation devices
  - PDP67 ION and PDP67 ION HP: 5-pin M12 two-sided connector (see Order reference for accessories, connection to PDP67 [61])
  - all other suitable evaluation devices (see System connection [34]): 5-pin M12 one-sided connector and open cable end connection to clamping sleeves (see Order reference for accessories, connection to other evaluation devices [62])
- Aluminium alloy housing
- Die-cast zinc end caps
- Shock resistance
  - Bracket Swivel-Mount: 10g
  - Bracket Adv Bracket Kit: 50g
- Front panel of PC
- Standard installation kit with flexible bracket (swivel mount) (included in delivery) to hold the transmitter/receiver
  - For standard application
  - Transmitter/receiver remains rotatable for proper orientation
- Dead-zone-free safety light curtain installation [24] with the PSEN opII Adv Bracket Kit (available as an accessory [59]) as a bracket for a transmitter/receiver
  - Dead-zone-free on both sides for protected field height of 300 mm or more

– Dead-zone-free on one side for protected field height of 150 mm
– Transmitter/receiver remains rotatable for proper orientation
– Protected field heights of 150-600 mm, including: 1 PSEN opII Adv Bracket Kit2 (=2 clamping units per transmitter and receiver)
– Protected field heights of 750-1200 mm, including: 1 PSEN opII Adv Bracket Kit3 (=3 clamping units per transmitter and receiver)
– Protected field heights of 1350-1800 mm, including: 2 PSEN opII Adv Bracket Kit2 (=4 clamping units per transmitter and receiver)

Unit view

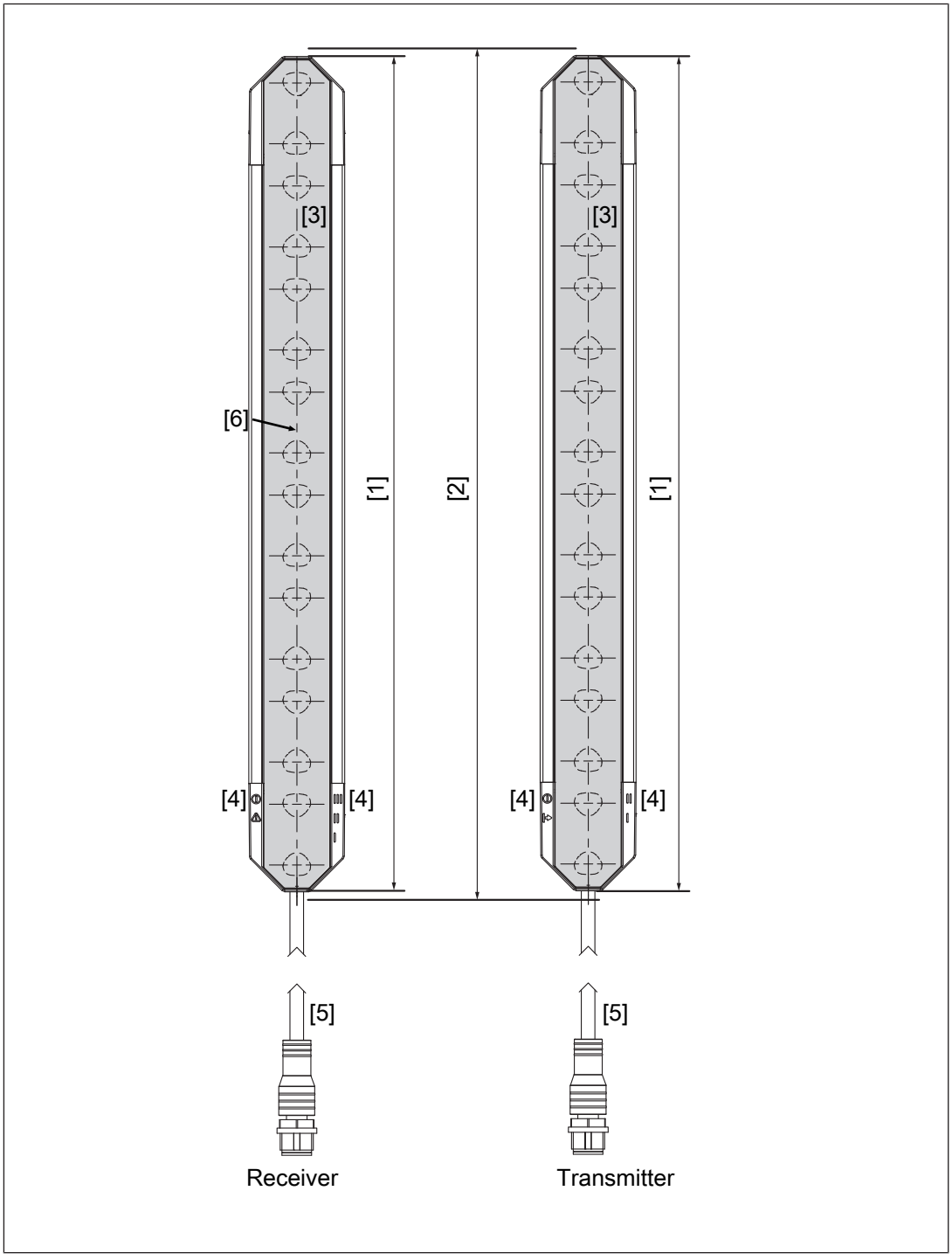

Fig.: Front view of the safety light curtain transmitter and receiver, protected field height 300-1800 mm with connection cable

Legend

[1] Protected field height

[2] Effective protected field height

[3] Tinted front panel

[4] LEDs for status information

[5] Connection cable, M12 connector

[6] Optical centre axis

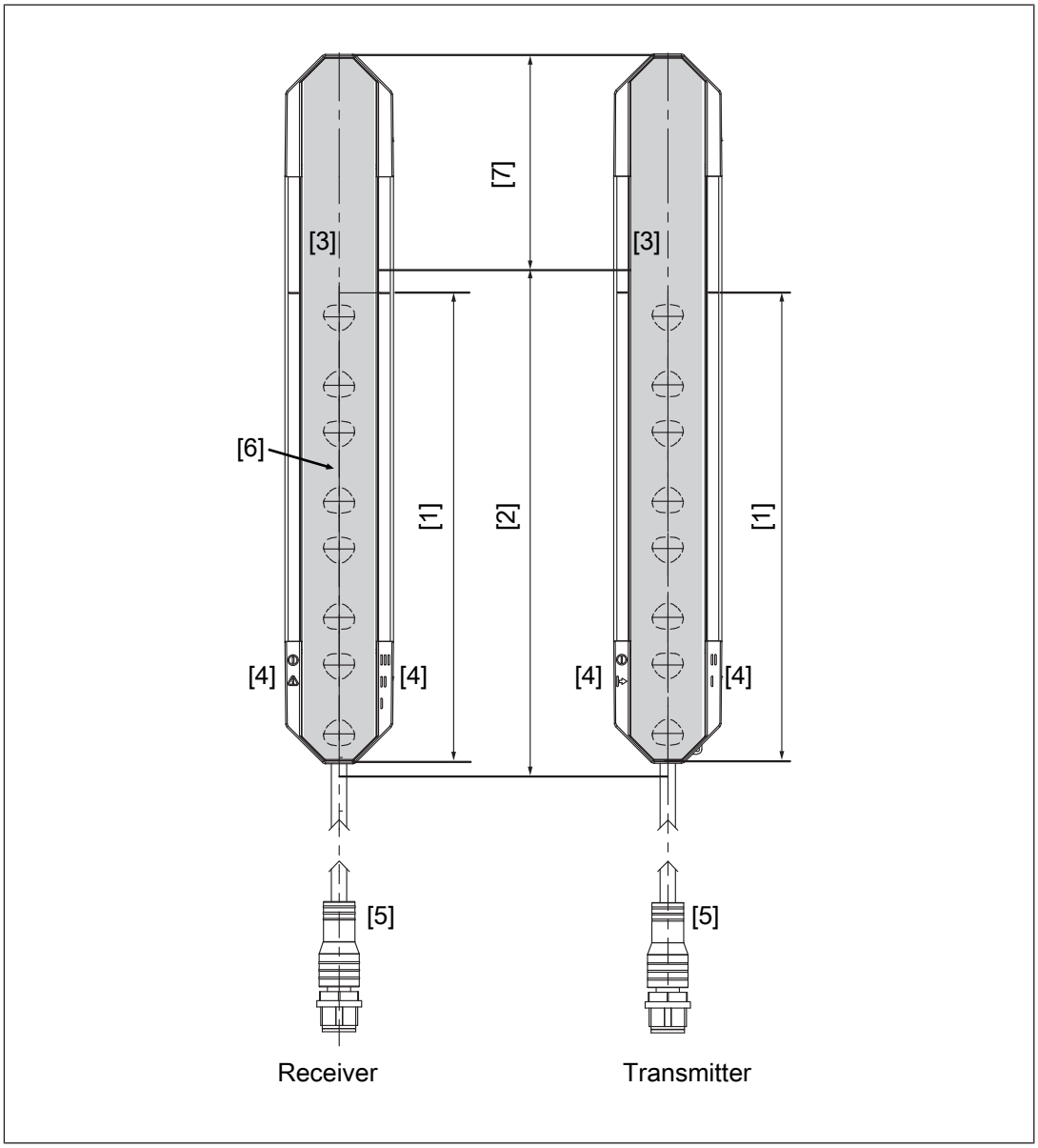

Fig.: Front view of the safety light curtain transmitter and receiver, protected field height 150 mm with connection cable

Legend

[1] Protected field height

[2] Effective protected field height

[3] Tinted front panel

[4] LEDs for status information

[5] Connection cable, M12 connector

[6] Optical centre axis

[7] Dead zone

The beginning of the dead zone is indicated by black lines on both sides of the front panel

Scope of supply

Qty	Description	Illustration
1	Transmitter	
1	Receiver	
4	Standard installation kit consisting of:	
4	▸ Flexible bracket (swivel mount) in which transmitters/receivers can be fastened and rotated to the proper orientation	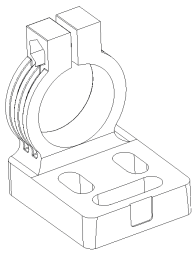
4	▸ Holder for connecting the transmitter/receiver end caps to the flexible bracket	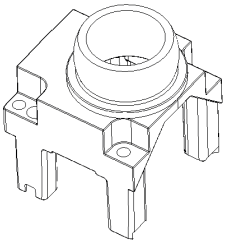
16	▸ Tightening screw M3x33.4 oval-head screw, self-tapping	
4	▸ Clamping screw with nut ISO 4762 M4x10 8.8 cylinder screw with nut	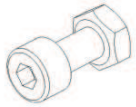
8	▸ Mounting screw ISO 4762 M6x20 8.8 cylinder screw with washer	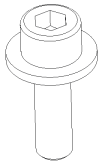

Safety

Intended use

Safety light curtain of the PSEN opII4H Series are electrosensitive protective equipment of the ESPE type 4. They are used to protect personnel and systems. The safety light curtains are designed to

- securing hazardous areas within buildings and
- securing access within buildings with a resolution of 30 mm.

The safety light curtain may only be used for personal protection on machinery if

- the hazardous state can be removed by the safety light curtain and
- the starting of the machine is controlled by the safety light curtain and
- the safety assessment prescribes no better resolution than 30 mm.

The safety level PL e (Cat. 4)/SIL CL 3 is only achieved if

- The safety outputs must be processed safety-related in 2-channel mode.

The safety light curtain is not equipped with a restart interlock.

If the safety assessment necessitates a restart interlock, this feature must be ensured within the plant's programmable safety system. The system may not be started in the hazardous area following a protection violation if personnel are still in the hazardous area.

Prevent circumvention of the protected field. This means that other safety devices and safeguards may be required in addition to the safety light curtain . These should be determined via a safety assessment based on the specific application area and specific local conditions (e.g. official specifications).

Refer to IEC/TS 62046 to determine other necessary safeguards for securing the hazardous area.

Their application must fulfil the site's relevant national regulations (e. g. EN 60204-1, NFPA 79:17-7).

The following is deemed improper use in particular

- Any component, technical or electrical modification to the product,
- Use of the product outside the areas described in this manual,
- Use of the product outside the technical details (see Technical details [📖 48]).



NOTICE

EMC-compliant electrical installation

The product is designed for use in an industrial environment. The product may cause interference if installed in other environments. If installed in other environments, measures should be taken to comply with the applicable standards and directives for the respective installation site with regard to interference.

Safety regulations

Safety assessment

Before using a device it is necessary to perform a safety assessment in accordance with the Machinery Directive.

Functional safety is guaranteed for the product as a single component. However, this does not guarantee the functional safety of the overall plant/machine. In order to achieve the required safety level for the overall plant/machine, define the safety requirements for the plant/machine and then define how these must be implemented from a technical and organisational standpoint.

Use of qualified personnel

The products may only be assembled, installed, programmed, commissioned, operated, maintained and decommissioned by competent persons.

A competent person is a qualified and knowledgeable person who, because of their training, experience and current professional activity, has the specialist knowledge required. To be able to inspect, assess and operate devices, systems and machines, the person has to be informed of the state of the art and the applicable national, European and international laws, directives and standards.

It is the company's responsibility only to employ personnel who

- Are familiar with the basic regulations concerning health and safety / accident prevention,
- Have read and understood the information provided in the section entitled Safety
- Have a good knowledge of the generic and specialist standards applicable to the specific application.

Warranty and liability

All claims to warranty and liability will be rendered invalid if

- The product was used contrary to the purpose for which it is intended,
- Damage can be attributed to not having followed the guidelines in the manual,
- Operating personnel are not suitably qualified,
- Any type of modification has been made (e.g. exchanging components on the PCB boards, soldering work etc.).

Disposal

- In safety-related applications, please comply with the mission time T_M in the safety-related characteristic data.
- When decommissioning, please comply with local regulations regarding the disposal of electronic devices (e.g. Electrical and Electronic Equipment Act).

Function description

Basic function

The safety light curtain consists of a transmitter and a receiver.

Their shape and design

- protect the transmitter and receiver from external damage
- protect the safety light grid from malfunctions caused by vibration (see Technical details, environmental data section [48]).

The protected area is covered by infrared light beams, which are emitted from the transmitter to the receiver. The protected field thus produced is able to detect an opaque object.

The control and monitoring of the transmitted and received infrared rays is performed by microprocessors.

The output signal switching devices (OSSDs) switch to the OFF state when one of the following conditions is met:

- one or more light beams are interrupted by an object, a body part, or an opaque object that is at least as large as the resolution (30 mm) covered by the safety light curtain,
- an error is detected by one of the OSSDs,
- or interfering light is detected.

If an error occurs, the OSSDs remain in the OFF state. The state can be returned to the ON state only after a successful restart [42] of the safety light grid.

The safety light grid in the PSEN opII4H Series offers the following functions:

- Automatic start
- automatic restart
- Operation of 2 safety light grids that are parallel to one another and are installed with the same orientation (noting the information in ambient conditions [20] and minimum separation of parallel, aligned safety light grids [20])

Transmitters and receivers are each electrically connected with a cable with an M12 connector that is assigned to the transmitter and receiver on the LED side.

The transmitter and receiver are optically synchronised and therefore need not be directly connected to each other.

Information about the operating status of the safety light curtain and any error state is provided by means of LEDs.

The indicators are described in the section: Status information [39].

Automatic start and restart

Automatic start

When the safety light curtain is switched on the safety light curtain starts automatically and the OSSDs switch to the ON state under the following conditions:

- Both OSSDs are wired correctly **and**
- No fault has occurred **and**
- The protected field is clear.

If the protected field is violated, the OSSDs switch to the OFF state.

Automatic restart

The OSSDs automatically switch to the ON state during operation under the following conditions:

- both OSSDs are wired correctly **and**
- no error has occurred **and**
- the protected field is clear **and**
- at least 80 ms have elapsed since the switch to the OFF state.

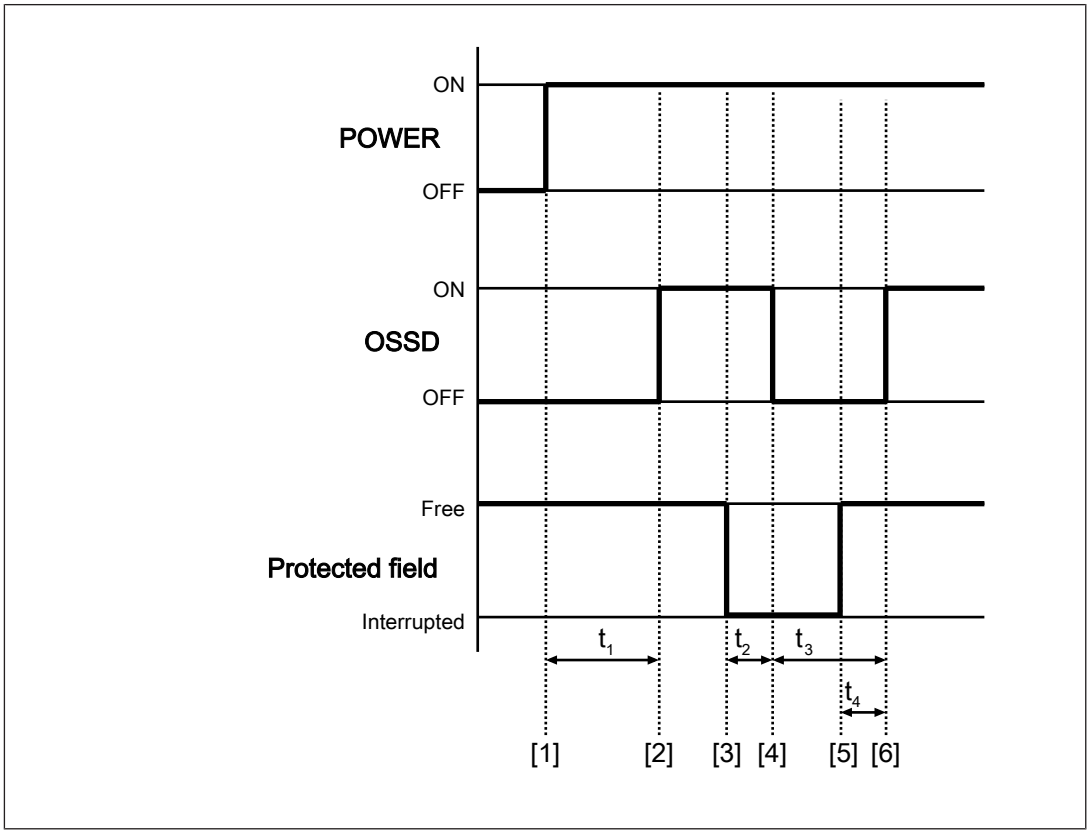

Fig.: Automatic start and restart timing diagram

Legend

[1]	Safety light curtain is switched on
[2]	Check completed successfully, OSSDs in the ON state
[3]	Protected field interrupted
[4]	OSSDs in the OFF state
[5]	Protected field is clear again, check for errors is restarted
[6]	OSSDs in the ON state
t_1	Check is begun to determine whether the protected field is clear and whether there are errors
t_2	Response time (coded/uncoded), until OSSDs switch to the OFF state (see Technical details [📖 48])
t_3	Minimum time that the OSSDs remain in the OFF state: 80 ms

t_4 Interval between enabling of the protected field and the OSSD's change to the ON state

- Without beam coding
  - If a synchronisation beam pair is interrupted: Response time (without beam coding) + 10 ms
  - If both synchronisation beam pairs (first and last light beam pair) are interrupted: typ. 600 ms (max. 3 s)
- With beam coding
  - If a synchronisation beam pair is interrupted: Response time (with beam coding) + 10 ms
  - If both synchronisation beam pairs (first and last light beam pair) are interrupted: typ. 1500 ms (max. 6 s)

Operation of two safety light curtains with the same alignment

Two adjacent safety light curtains with the same alignment can be operated, without the two safety light curtains influencing each other (see Minimum distance between parallel, aligned safety light curtains [📖 20]).

For the correct function of the two safety light curtains, a beam coding of the safety light curtains is required. The beam coding is performed via the connection of the safety light curtain to the supply voltage (see Connector pin assignment [📖 33]).

Project configuration

Maintaining the safety distance

The minimum distance of the safety light curtain to the dangerous machine component should be such that the operator cannot reach the danger zone until the movement of the dangerous machine part has stopped.

In accordance with the standard

- EN ISO 13855

this distance depends on three factors:

- Response time of the safety light curtain

  Time between the beams being interrupted and the OSSDs changing to the OFF state (see Technical details [📖 48])

  When beam coding is used, the response time is increased (see Technical Details)
- Machine's stopping time

  Time between the OSSDs changing to the OFF state and the hazardous machine movement stopping (including the reaction time of the connected relay)
- Approach speed

  The speed with which the object to be detected is nearing the danger zone in mm/s

NOTICE

Increase in safety light curtain's response time

When beam coding is used, the response time is increased (see Technical Details)

The general formula for calculating the minimum distance in accordance with EN ISO 13855 is as follows:

$S = K * (t_1 + t_2) + C$

S	Minimum distance in mm, measured from the start of the protected field to the danger source
K	Approach speed with which the object to be detected is nearing the danger zone in mm/s K = 1600 mm/s when S > 500 mm K = 2000 mm/s when S ≤ 500 mm
t_1	Response time of the safety light curtain in seconds Time it takes for the signal at the OSSD output on the safety light curtain to change once a protected field has been violated (see Technical details [📖 48])
t_2	Machine's stopping time in seconds The time required for the machine to stop after the signal at the OSSD output changes

C	Additional distance of 128 mm for safety light curtains with hand protection

Resolution

The safety light grids may only be used for protected fields in which a detection capability of 30 mm is sufficient.

Protected field perimeters

During planning, ensure sufficient protected field height to secure the danger zone.

The protected field perimeter is defined in dimensions [📖 46].

Ambient conditions

- Install the safety light grids in an environment that corresponds to the environmental data provided in the Technical details [📖 48].
- Do not install the safety light grid near particularly intense and/or flashing light sources; this applies to the receiver in particular.
- The transmitter of one safety light curtain must not interfere with the receiver of another safety light curtain .
- The transmitters and receivers of two different safety light grids must not be synchronised.
- Avoid strong electromagnetic interference when operating the safety light grid.

- When operating the safety light grid, avoid the development of smoke, mist, or dust that would reduce the grid's operating range.

Distance from reflective surfaces

If there are reflective surfaces near the beams emitted from the safety light curtain (whether from above, below, or from the side), passive reflections can cause an object within the protected field to remain undetected (see diagrams).

As a result, the safety light grid must be installed at a minimum distance from reflective surfaces.

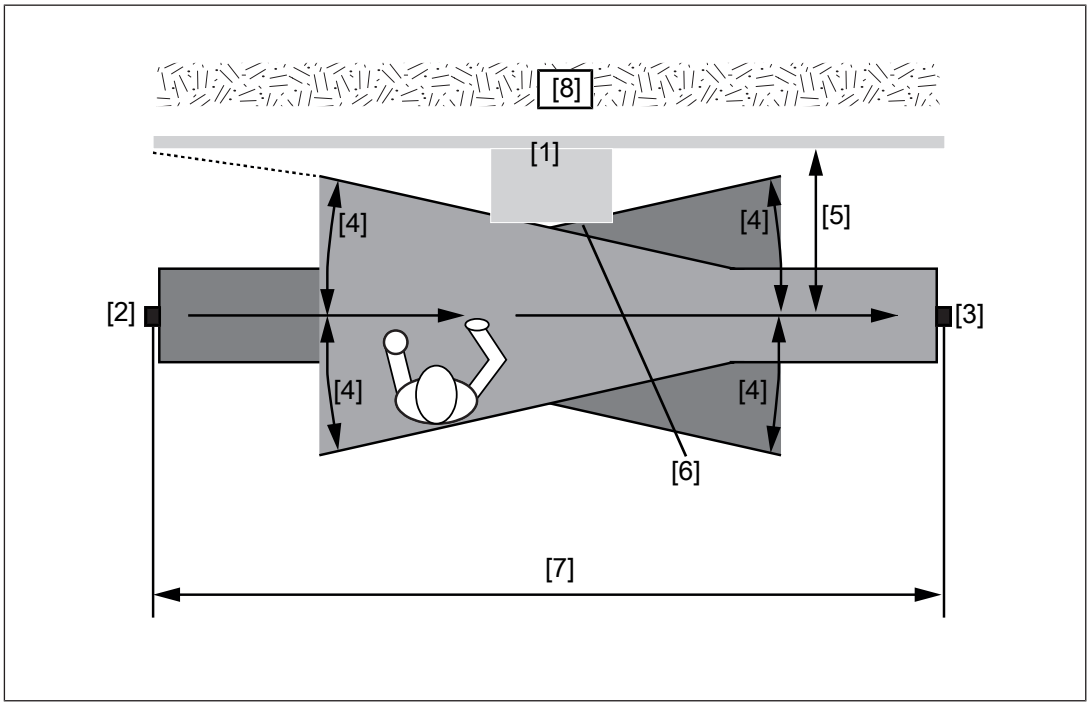

Fig.: Interference with the function of the safety light curtain due to reflective surfaces – top view

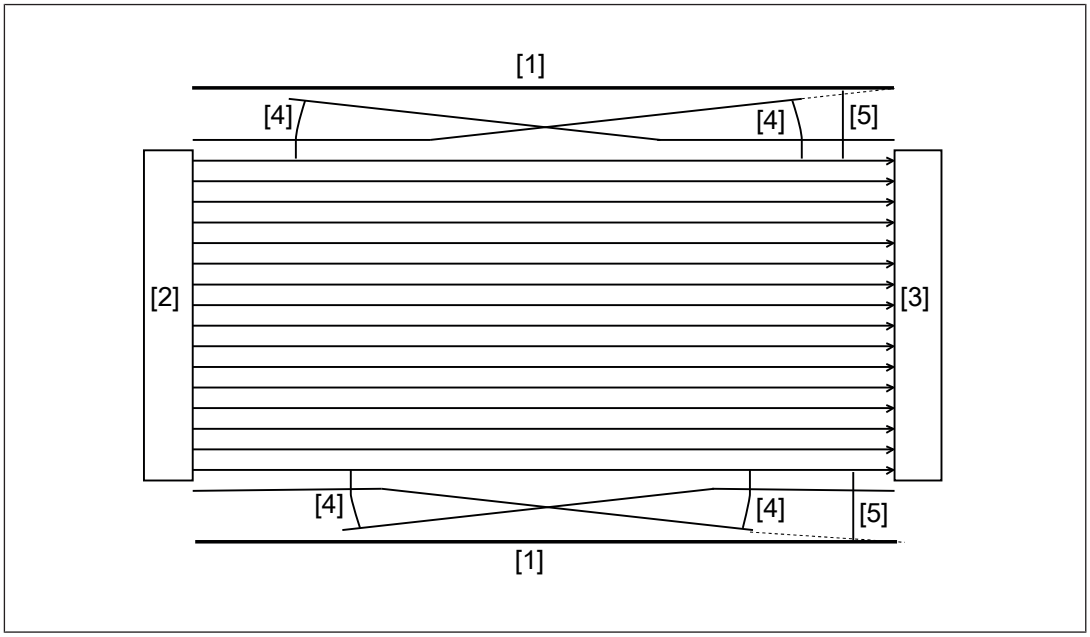

Legend

[1] Reflective surface

[2] Transmitter

[3] Receiver

[4] Half of the opening angle (= α) (see Technical details [📖 48]) of the light beams emitted by the safety light curtain

[5] Minimum distance D between the safety light curtain and the reflective surface

[6] Passive reflections on the surface

[7] Distance between transmitter and receiver (working distance)

[8] Hazardous area

The minimum distance D depends on two factors:

- Working distance between transmitter and receiver
- the maximum opening angle [📖 48] of the light beams emitted by the safety light curtain at:

  5° = ± 2.5° in relation to the optical axis

Minimum distance of the safety light curtain to reflective surfaces

The formula for calculating the minimum distance D is:

- For a working distance of less than 3 m: D = 0.131 m
- For a working distance of 3 m or more: D = working distance in m x tan α

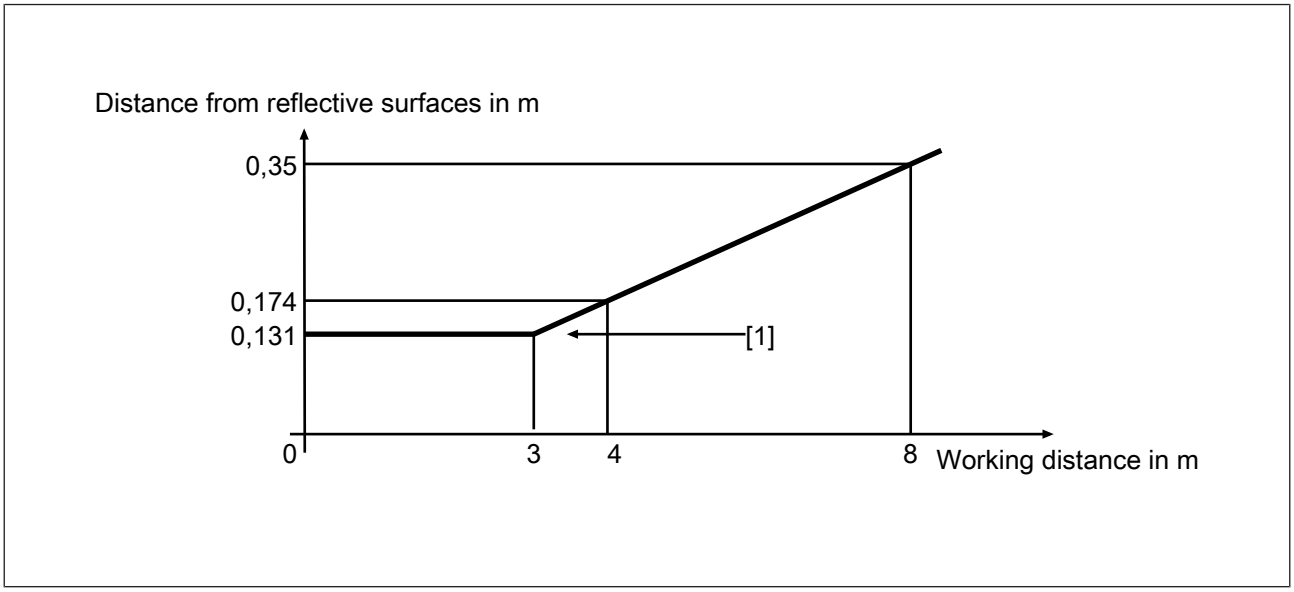

Fig.: Relationship between minimum distance and working distance

Legend

[1] Minimum distance D

Minimum distance between parallel, aligned safety light curtains

Please note:

Safety light grids that are installed so as to be parallel and aligned must have a minimum spacing corresponding to the information in distance to reflective surfaces [📖 17].

Without beam coding

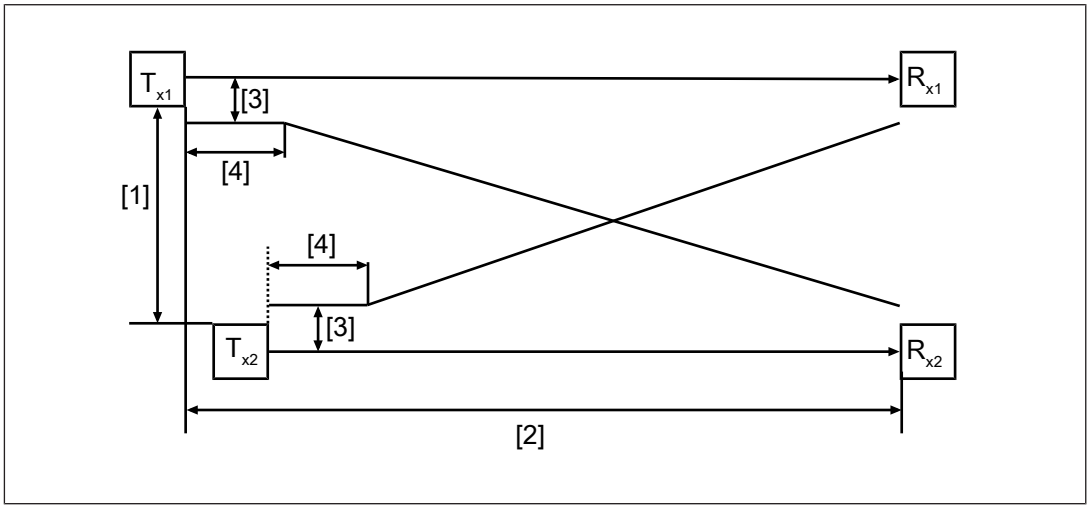

Legend

- T_{x1} Transmitter from the first safety light curtain
- R_{x1} Receiver from the first safety light curtain
- T_{x2} Transmitter from the second safety light curtain
- R_{x2} Receiver from the second safety light curtain
- [1] Minimum distance of **2 x D** between two safety light curtains that are aligned
- [2] Working distance
- [3] Minimum distance D, dependent on the working distance
- [4] Working distance (≤ 3 m) with constant minimum distance D = 0.131 m

With beam coding

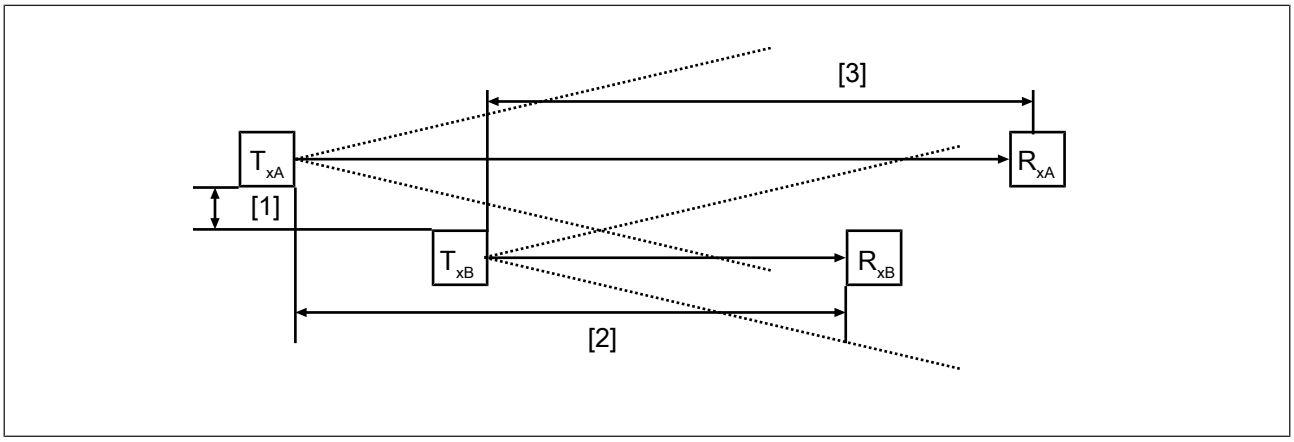

Legend

T_{xA}	Transmitter from the first safety light curtain
R_{xA}	Receiver from the first safety light curtain
T_{xB}	Transmitter from the second safety light curtain
R_{xB}	Receiver from the second safety light curtain
[1]	Minimum distance between two aligned safety light curtains with beam coding
[2]	Distance between the transmitter of the first safety light curtain and the receiver of the second safety light curtain
[3]	Distance between the transmitter of the second safety light curtain and the receiver of the first safety light curtain

Minimum distance between two aligned safety light curtains with beam coding

Lower value of the distances [2] and [3]	Minimum distance between safety light curtains that are aligned in parallel
< 2.5 m	2xD = 262 mm
≥ 2.5 m	-

Installation of several adjacent safety light grids

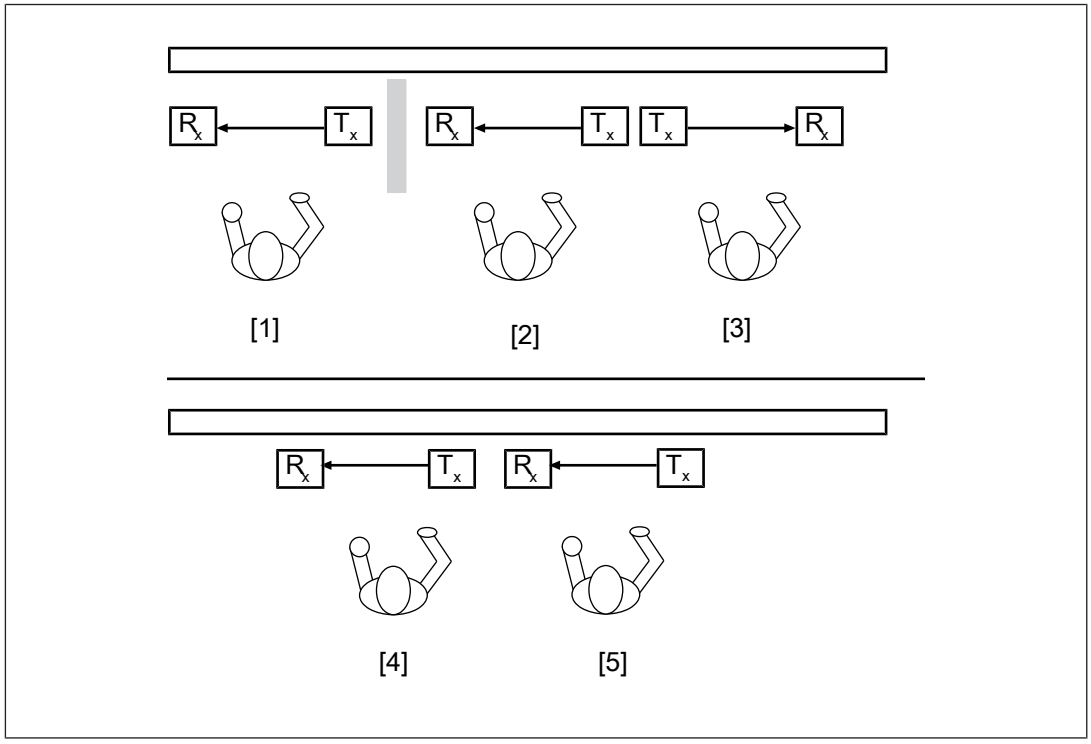

Fig.: Using several adjacent safety light curtains

Legend

Rx Receiver of a safety light curtain

Tx Transmitter of a safety light curtain

[1] Connecting the safety light curtain with an opaque surface to shield the safety light curtain on the right

[2] Connection of the safety light curtain aligned with [1]

[3] Connection of safety light curtain without shielding, but in the orientation opposite to [2]

[4] Connection of the safety light curtain with beam code A-coded

[5] Connection of the safety light curtain with beam code B-coded

- Beam coding of two safety light curtains
  - If two safety light codes are to be used in parallel, a beam coding of the safety light curtains is recommended. When connecting the safety light curtain to the supply voltage, the safety light curtains are connected to different pins. This guarantees a differentiation of the beams, and transmitter and receiver can not interfere with each other.

If several adjacent safety light curtains need to be installed, steps must be taken to ensure that the transmitter on one safety light curtain does not interfere with the receiver on another safety light curtain.

An arrangement of the adjacent safety light curtains can be achieved by various methods.



CAUTION!

Extension of the response time of the safety light curtain when using the beam coding

When calculating the safety distance, remember the extended response time (see Technical details [48]) with beam coding.

Changing from uncoded to coded operation is a change of the safety light curtain and it requires a new risk assessment and hazard analysis.

– Perform a new risk assessment and hazard analysis and determine the new minimum distance [15] to the hazardous area with the extended response time.

Use of deviating mirrors

Danger zones with different but adjacent access sides can be monitored using a safety light curtain in conjunction with deviating mirrors [59].

The diagram below shows an example solution for monitoring three different access sides using two deviating mirrors. The deviating mirrors must be positioned at an angle of 45° to the beams from the safety light curtain.

When using deviating mirrors, please note:

- Even a minor angular displacement of the mirror can lead to misalignment, adversely affecting or preventing the function of the safety light curtain. Use the laser pointer PSEN opII for alignment (see Order reference for accessories [59]).
- The minimum safety distance to the dander zone must be maintained for all sections of the light path.
- The use of a single deviating mirror reduces the operating range (the degree of reduction is specified in the technical details of the used mirrors). This percentage increases when an additional deviating mirror is used. Please consider this reduction when positioning the safety light curtain.
- You should not use more than two mirrors per device.
- Any dust or dirt on the mirror’s reflective surface will drastically reduce the operating range.

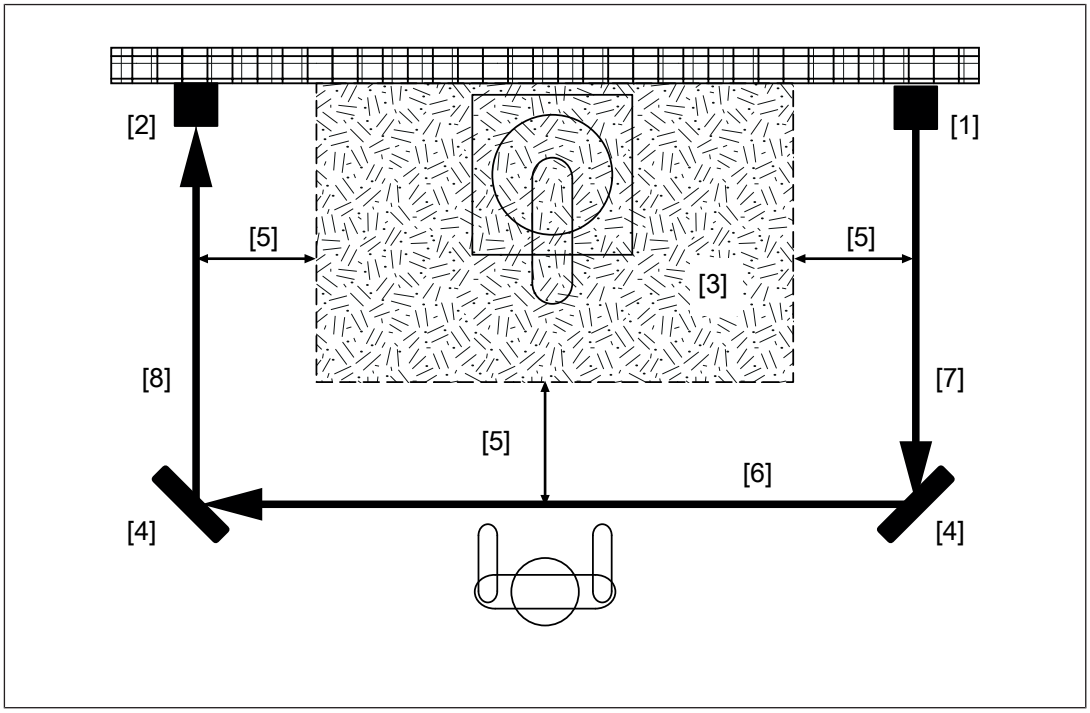

Fig.: Example for using deviating mirrors

Legend

[1] Transmitter
[2] Receiver
[3] Hazardous area
[4] Deviating mirror
[5] Minimum safety distance
[6] Distance between the deviating mirrors
[7] Distance from transmitter to deviating mirror
[8] Distance from deviating mirror to receiver

Dead zones

Use of the standard installation kit results in a dead zone of 15.4 mm on both sides of the safety light curtain.

If you want to use the safety light grid without dead zones, use the PSEN opII Adv Bracket Kit for safety light curtain installation (see Dead-zone-free installation [📖 6]).

Use the installation information provided in the PSEN opII Adv Bracket Kit operating manual.

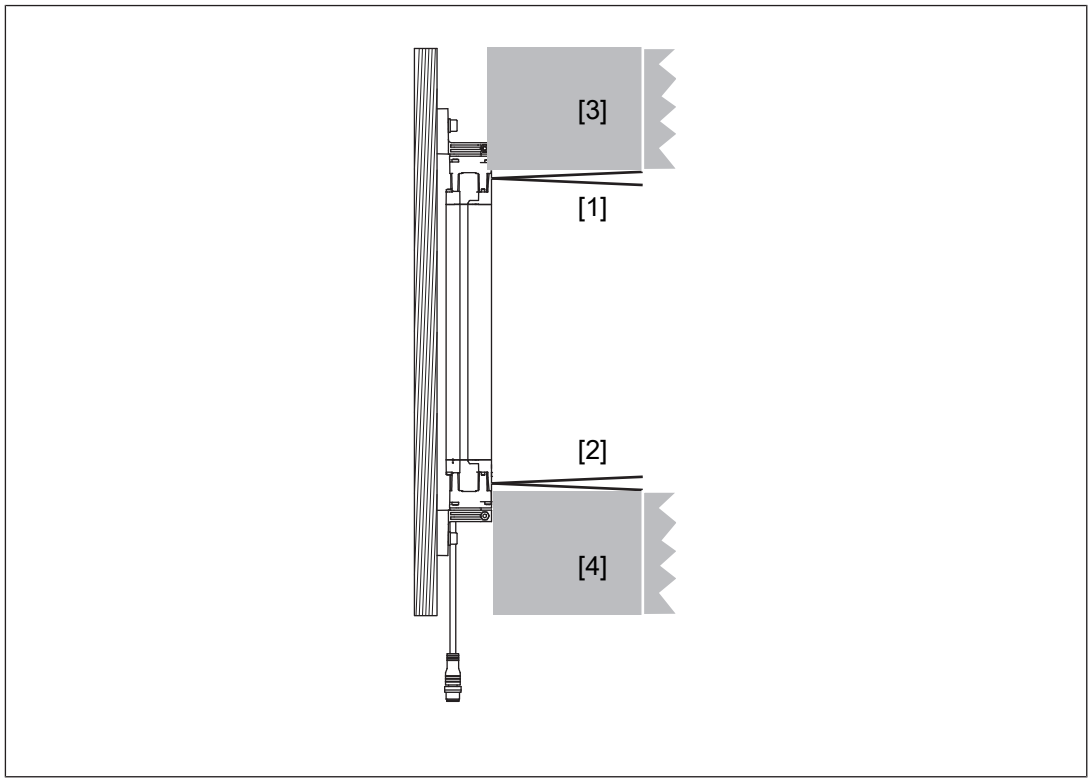

Fig.: Placement of the dead zones in vertical safety light curtain installation

Legend

[1] Last light beam (wiring side)

[2] Last light beam (cable side)

[3] Wiring-side dead zone

[4] Cable-side dead zone

Installation and alignment

Please note:

- The optical surfaces of the transmitter and receiver must be parallel to each other and oriented opposite to each other.
- The connection sides of the transmitter and receiver must be on the same side and at the same height (see diagram).

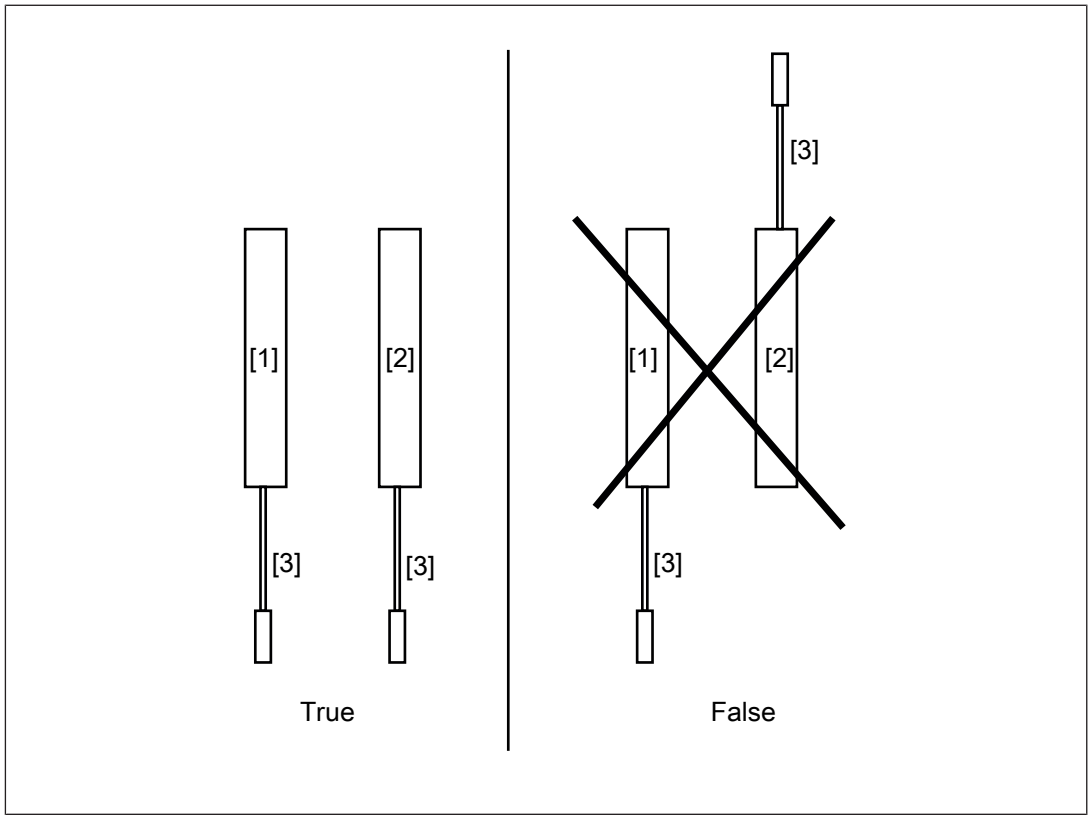

Legend

[1] Transmitter
[2] Receiver
[3] Connection cable

- The distance between the transmitter and receiver must be within the operating range of the safety light curtain used (see Technical details [📖 48]).
- The installation surface must be at least as wide as the standard installation kit
- The installation surface may have a flatness imperfection of no more than 1.5 mm.

Attach the safety light curtain to the mounting surface

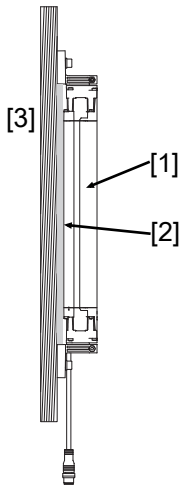

Please note the following when installing the safety light curtain [1]:

If the standard installation kit is used, the gap [2] between the safety light curtain [1] and the installation surface [3] must be smaller than the safety light curtain resolution.

Prepare the installation surface.

Clean the installation surface. The installation surface must be free of dust and grease.

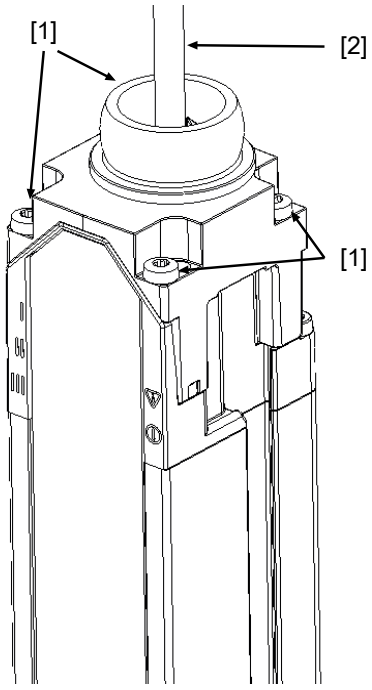

Mount the holder on the end cap on the connection side of the safety light curtain

Feed the cable [2] through the opening in the holder.

Ensure that the holder is flush with the end cap (see diagram).

Attach the holder to the end cap with the tightening screws (Torx T10) included in delivery.

[1] Torque setting 0,7 Nm

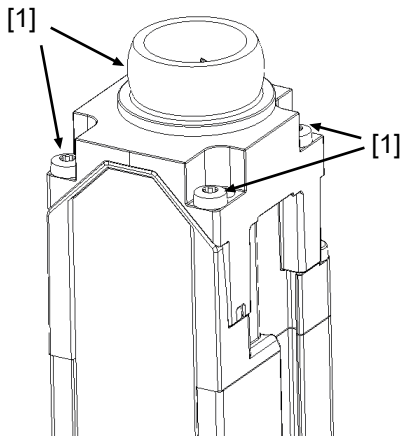

Mount the holder on the end cap on the wiring side of the safety light curtain

Ensure that the holder is flush with the end cap (see diagram).

Attach the holder to the end cap with the tightening screws included in delivery.

[1] Torque setting 0,7 Nm

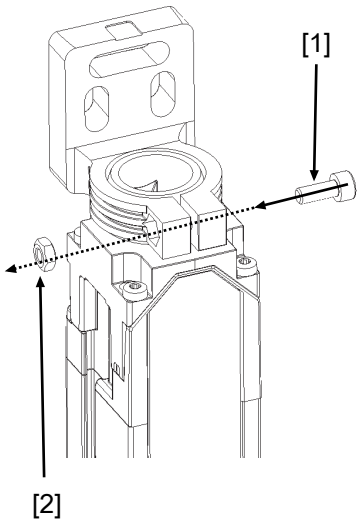

Mount the flexible bracket (swivel mount) on the holder on both the connection and wiring sides of the safety light curtain.

Push the flexible bracket over the holder. The flexible bracket must lie flush with the holder.

Fix the flexible bracket in place with the clamping screw [1] and the nut [2].

The screw connection is only tightened to the final torque when the assembly is orientated.

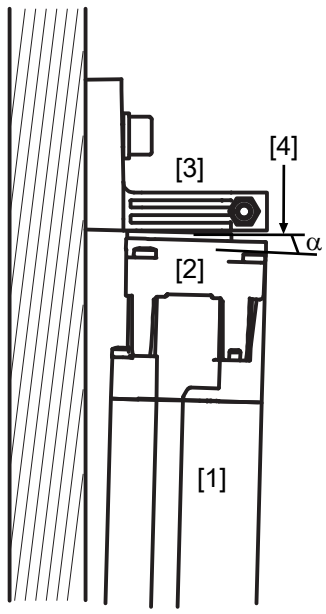

Uneven installation surfaces can be compensated for with the standard installation kit to a limited extent only.

Please note the following when installing the safety light curtain [1]:

- The angle [4] of the flexible bracket [3] on the holder [2] may not be more than 2°.
- The flexible bracket [3] must be seated on one side of the holder [2].

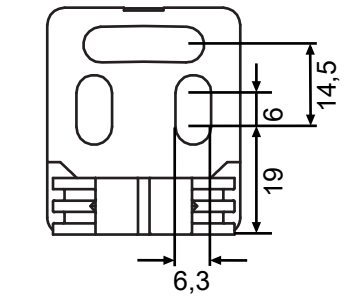

Bore holes in the installation surface (two M6 screw boreholes per flexible bracket) for mounting the flexible brackets for the transmitter and receiver.

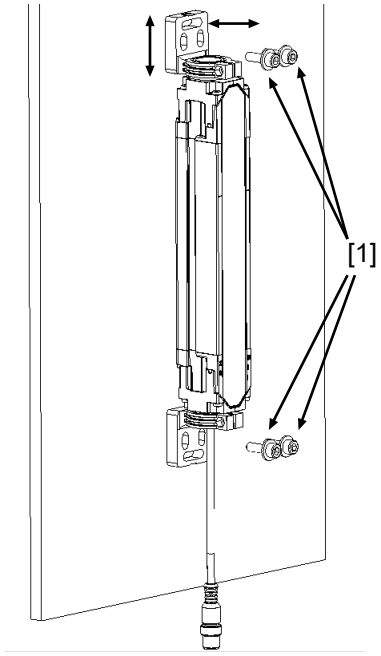

Fix the transmitter and receiver and their flexible brackets in place on the installation surface.

For each bracket, use two mounting screws with washers [1] included in delivery [10]. If necessary, mounting screws with deviating lengths can be used.

Transmitters and receivers can be shifted vertically and horizontally.

Screws are only tightened to the final torque during alignment.

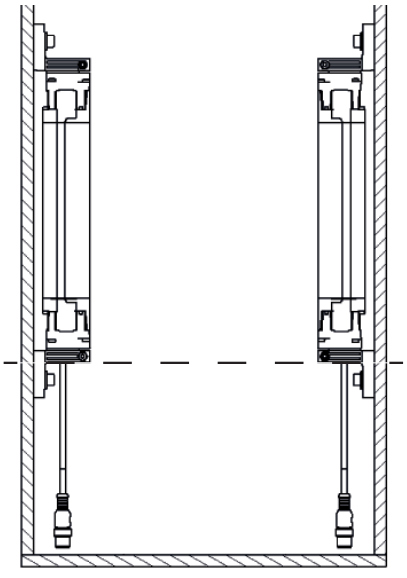

Ensure that the transmitters and receivers are properly installed in a suitable place.
Ensure that the transmitters and receivers are positioned at the same height and parallel to one another.

Orientation

General guidelines

For the safety light curtain to function properly, the transmitter and receiver must be aligned correctly.

The safety light curtains transmitter and receiver can be oriented with or without a laser orientation aid.

- Orientation with a laser orientation aid: the safety light curtain need not be switched on
- Orientation without a laser orientation aid: the safety light curtain must already be wired (see chapter entitled "Wiring" in the safety curtain's operating manual) and must be switched on

For alignment Pilz recommends the PSEN opII Laserpointer (see Order references for accessories [📖 59]) or another laser alignment aid.

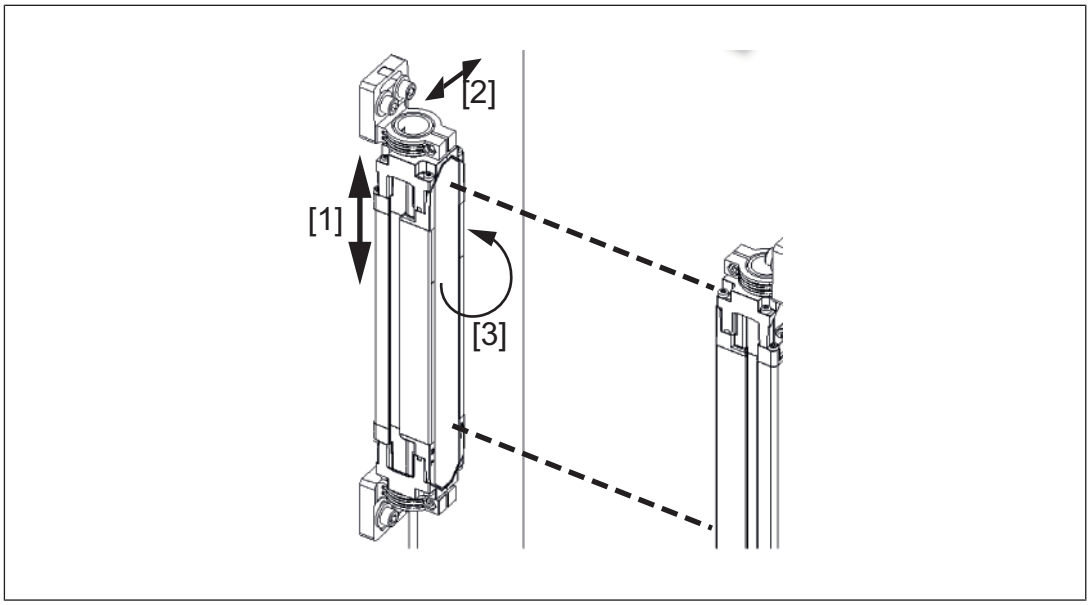

Fig.: Transmitter/receiver modification directions during orientation

Legend

[1] Vertical: by vertical shifting of position in the elongated holes in the top and bottom flexible brackets

[2] Horizontal: by moving up and down in the slots in a horizontal direction

[3] The axis orientation can be changed by rotating the flexible bracket right or left

Pilz recommends that modifications to the orientation of the transmitter/receiver be made in the following sequence:

1. Vertical modification
2. Horizontal modification
3. Axis orientation modification

Safety light curtain alignment

Optimal orientation with the use of a laser orientation aid

The optimal orientation has been achieved with a laser orientation aid if the following conditions are met:

- The beam of the laser orientation aid attached to the transmitter strikes the receiver **and**
- the beam of the laser orientation aid attached to the receiver strikes the transmitter

Perform the orientation as described in the laser orientation aid's operating manual.



WARNING!

The laser beam of the laser orientation aid is harmful to the human eye

The human eye may be injured.

– Ensure that the laser beam is not directed at a human eye.

Optimal orientation without a laser orientation aid

1. Determine the maximum rotation range in when the protected field LED (OSSD status) illuminates green.
   Rotate the transmitter and receiver until the protected field LED (OSSD status) changes from red to green.
2. Rotate the transmitter to the centre of the rotation range in which the protected field LED illuminates green.
3. Rotate the receiver to the centre of the rotation range in which the protected field LED illuminates green.

After the safety light curtain's transmitter and receiver have been orientated, the clamping screws and nuts and the mounting screws must be tightened to their final torques.

- Tighten the clamping screws [1] and the nuts [2] on the flexible bracket to a torque of 1,1 Nm.
- Tighten the brackets' mounting screws [3] on the installation surface to a torque of 3 Nm.

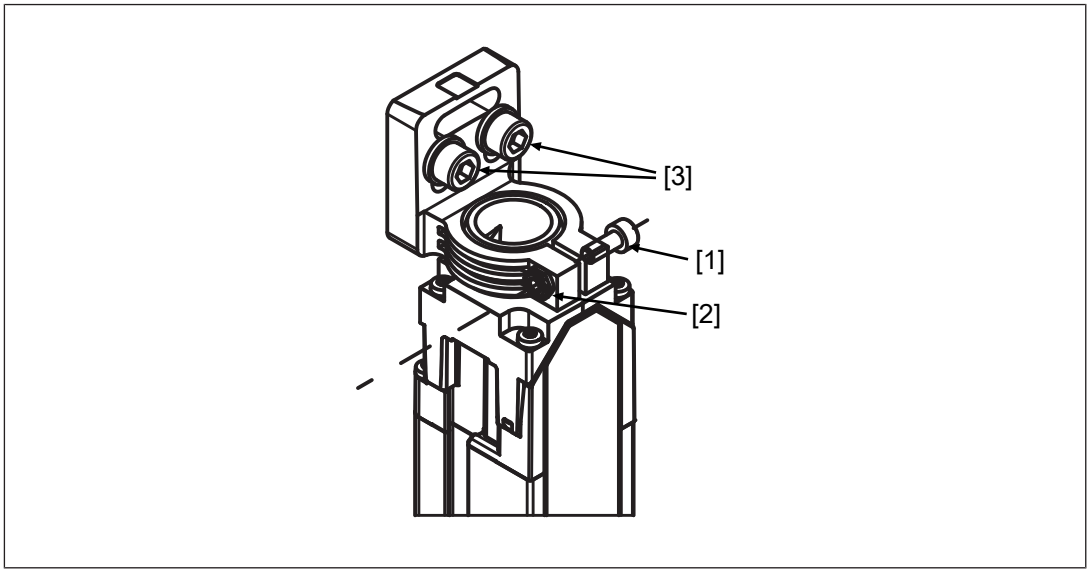

Legend

[1] Clamping screw

[2] Nut

[3] Mounting screws

Wiring

General guidelines

- Do not lay the connecting cable near or in contact with cables that carry high or highly volatile currents.
- Use separate cables to connect the wires to the OSSDs on different safety light curtains or safety switches.
- Do **not** connect contacts OSSD1 and OSSD2 in series or in parallel.
- For supply voltage, use only PELV/SELV power supplies that have a voltage buffer in accordance with EN 60204-1.
- The power supply must be able to bridge a short (20 ms) supply voltage failure in accordance with EN 61496-1.
- SELV power supply
  - Do **not** connect the safety light curtain housing to the earth conductor or the protective conductor. The transmitters and receivers must be electrically isolated from the machine/system. The use of the flexible bracket (swivel mount) provides this electrical isolation.
- Connection to PDP67
  - Use the order reference of the cable listed (see Accessories, connection to PDP67 [📖 61])
- Connection to other evaluation devices
  - Use the order reference of the cable listed (see Accessories, connection to other evaluation devices [📖 62])

– The clamps for connection to the evaluation device must be kept in a locked control cabinet. This prevents unauthorised modifications.

▶ Ensure compliance with permissible cable bending radii (see Technical details [📖 48]).

Connector pin assignment

Transmitter and receiver electrical connections are made with M12 connectors. These connectors are located on the bottom of the transmitters and receivers.

5-pin connector on the transmitter	PIN	Assignment	Cable colour
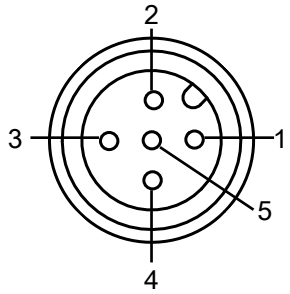	1	uncoded: +24 VDC	brown
		A-coded: +24 V DC	
		B-coded: 0 V DC	
	2	Reserved	white
	3	0 VDC	blue
	4	Reserved	black
	5	uncoded: +24 VDC	grey
		A-coded: 0 V DC	
		B-coded: +24 V DC	

5-pin connector on the receiver	PIN	Assignment	Cable colour
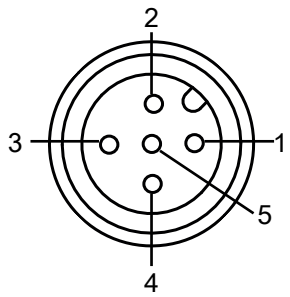	1	uncoded: +24 VDC	brown
		A-coded: +24 V DC	
		B-coded: 0 V DC	
	2	OSSD 1	white
	3	0 VDC	blue
	4	OSSD 2	black
	5	uncoded: +24 VDC	grey
		A-coded: 0 V DC	
		B-coded: +24 V DC	

▶ Ensure that the wiring has been performed according to the truth table.

Receiver/transmitter	Pin	uncoded	A-coded	B-coded
Receiver	1	24 V	24 V	0 V
	3	0 V	0 V	0 V
	5	24 V	0 V	24 V
Transmitter	1	24 V	24 V	0 V
	3	0 V	0 V	0 V
	5	24 V	0 V	24 V

Truth table for checking the pin assignment

Earthing the safety light curtain

Please note:

- Connect the 0 V connections on all the 24 V power supplies and earth the 0 V mains at a single point, or ensure that measures are in place to monitor for earth faults.
- The connection of the 0 V supply to the central earth bar or earth fault monitor must be in accordance with relevant national regulations (such as EN 60204-1, NFPA 79:17-7, NEC: Article 250).
- Connections should be protected from corrosion.
- Flexible earthing straps should be used on moving earth parts (e.g. machine parts, gates). Ensure these earthing straps are as short and wide as possible.
- For PELV power supplies

  Connect the power supply circuit to the earth conductor.

Commissioning

System connection

Make sure that the selected evaluation device has the following properties:

- 2-channel with feasibility monitoring
- OSSD signals are evaluated
- A test pulse lasting no longer than 300 µs is bridged

Suitable Pilz evaluation devices are, for example:

- PNOZelog for monitoring safety light curtains
- PNOZsigma for monitoring safety light curtains
- PNOZ X for monitoring safety light curtains
- PDP67 ION and PDP67 ION HP
  - Connect the OSSDs on the receiver to pins 2 and 4 on the PDP67 ION.
  - Ensure that pins 1 and 5 on the PDP67 ION are used as an ST output.
  - Make the connection using one of the cables listed in the order reference (see Order reference for accessories, connection to PDP67 [📖 61]).
- PNOZmulti for safety light curtain monitoring
  Configure the safety light curtain in the PNOZmulti Configurator with switch type 3.
- Automation system PSS 4000 for monitoring safety light curtains with the FS_LightCurtain function block

The correct connection to the respective evaluation device is described in the operating manual for the evaluation device. Connect the evaluation device according to the specifications in the selected evaluation device's operating manual.

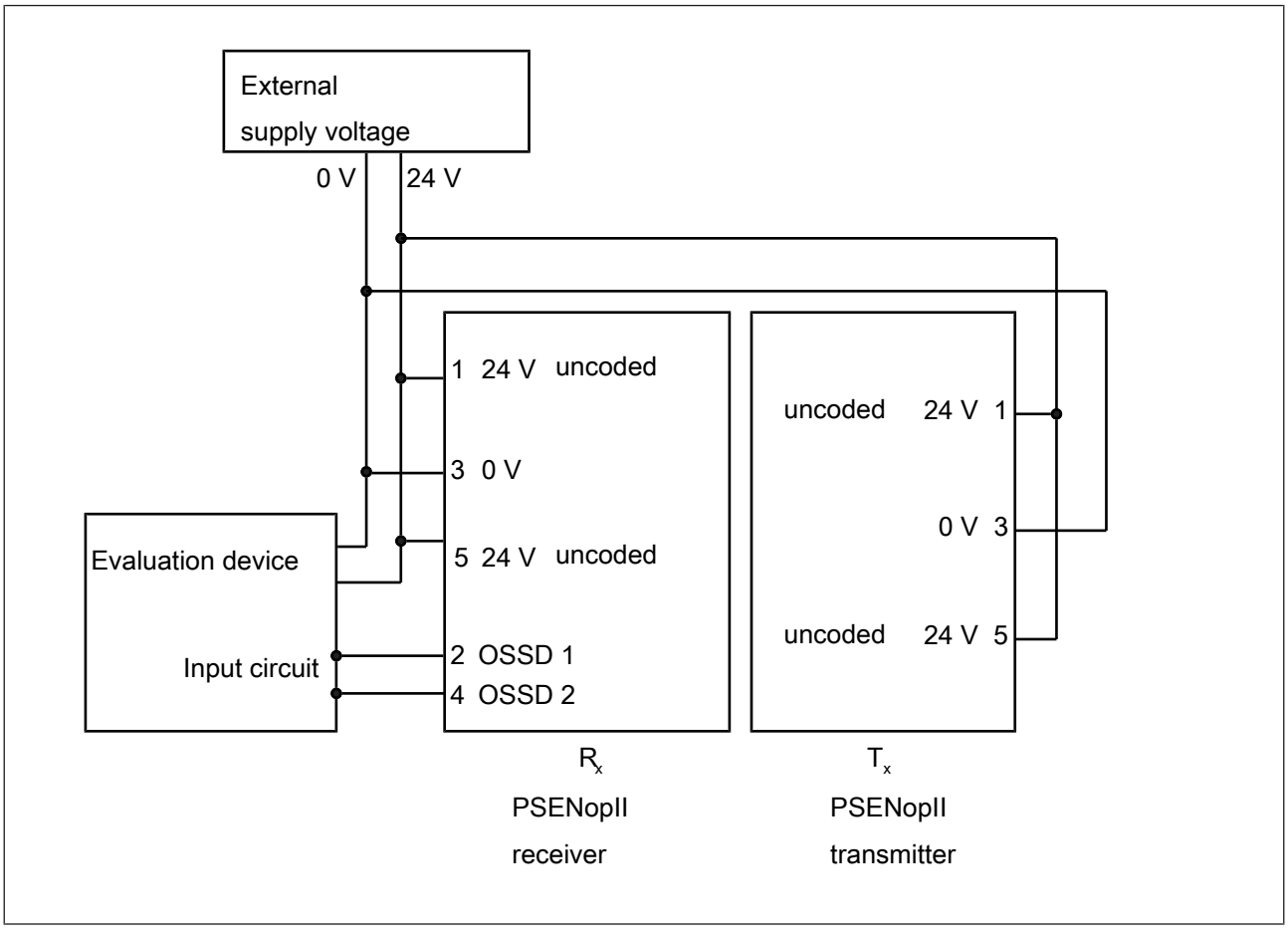

Fig.: Dual-channel connection of an uncoded safety light curtain at the input circuit of an evaluation device

CAUTION!

Extension of the response time of the safety light curtain when using the beam coding

When calculating the safety distance, remember the extended response time (see Technical details [48]) with beam coding.

Changing from uncoded to coded operation is a change of the safety light curtain and it requires a new risk assessment and hazard analysis.

– Perform a new risk assessment and hazard analysis and determine the new minimum distance [15] to the hazardous area with the extended response time.

CAUTION!

When considering the examples, please note that Pilz accepts no responsibility for the specific application. In particular, they may not be used without testing and approval.

The system manufacturer is responsible for creating appropriate safety concepts for the overall plant and for connection to the programmable safety system (including the user program). The applicable standards and regulations must be considered and observed.

Checking the safety light curtain

Once the safety light grid has been installed and aligned, final inspections must be carried out before it can be put into service.

INFORMATION

This inspection may only be carried out by qualified personnel.

Check the safety function of the safety light curtain

Procedure

In each of the indicated checks, the OSSDs must switch to the OFF state.

The OSSD status LED on the left side of the receiver must illuminate red.

1. Move the test rod slowly through the protected field (see diagram):
   - In the vicinity of the transmitter
   - In the vicinity of the receiver
   - In the centre of the protected field
2. Place the test rod at rest in a position in the protected field that is considered critical for the safety assessment results

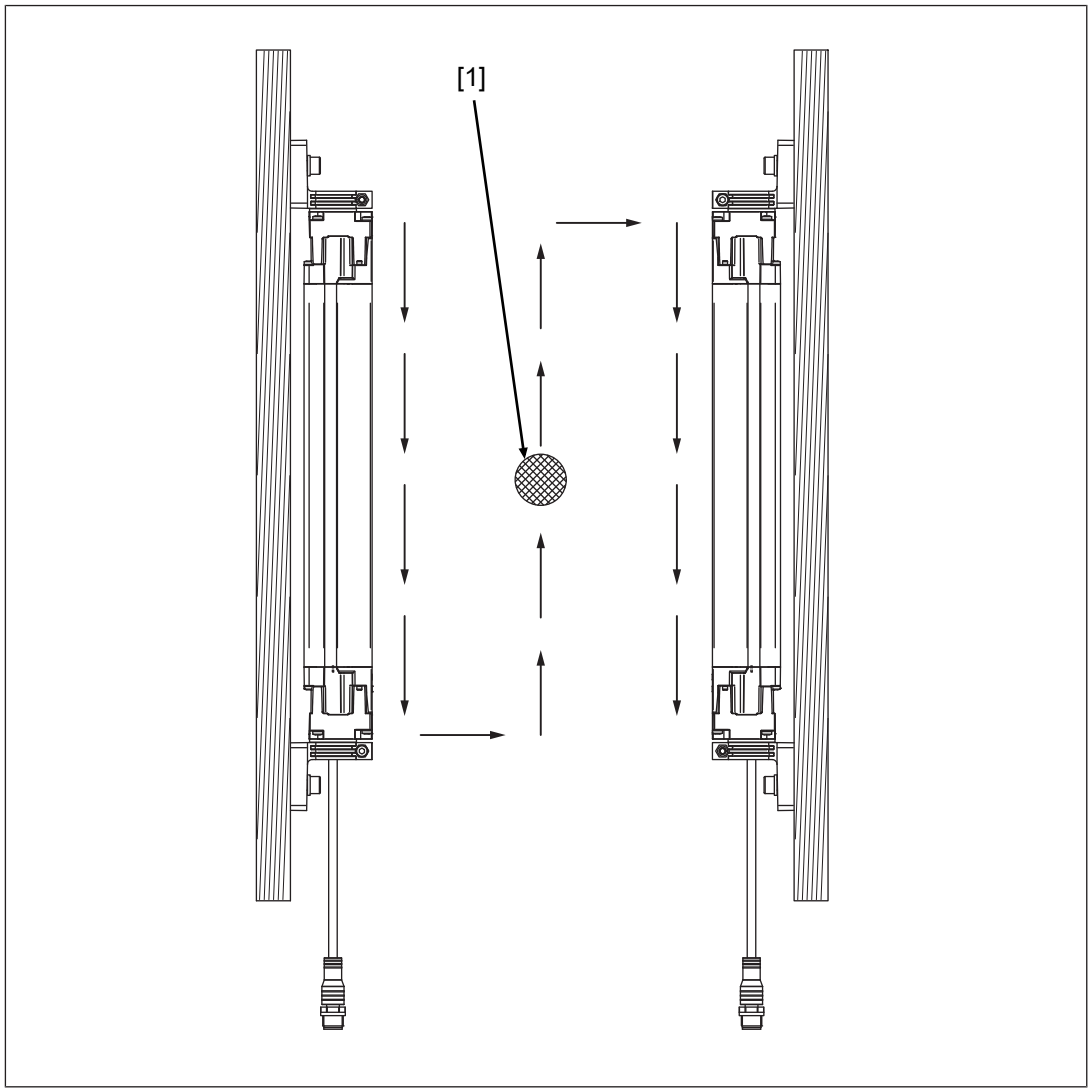

Legend

[1] Test rod

Check ambient conditions and installation

- Correct alignment and attachment
  Check the seating of the mounting screws by applying pressure to the edges of the safety light curtain. Neither the device status LED of the transmitter nor that of the receiver may illuminate.
- Safety distance
  The safety distance must comply with the requirements in Maintaining the safety distance.
- Circumventing the protected field
  The danger zone must be secured so that it is impossible to access by circumventing the protected field.
- Protected field perimeters
  The protected field perimeters (see Dimensions [46]) must completely secure the hazardous area, making it inaccessible.

- Response and stopping times must fulfil the requirements in Maintaining the safety distance

  Ensure that the safety light curtain’s response time and the machine's stopping time fulfil the requirements in Maintaining the safety distance.
- Check beam coding
  Is beam coding displayed correctly at the receiver (see Checking of safety light curtains with beam coding [📖 43])?
- No intense or flashing light sources in the vicinity

  There may be no especially intense or flashing light sources in the vicinity of the safety light grid.
- Ambient conditions

  Please observe the environmental conditions [📖 16].
- Use of deviating mirrors

  Check all areas that are bounded by a deviating mirror.

Operation

Display elements

The safety light curtain’s operating status is indicated with LEDs in the end caps of the connection side of the receiver and on the transmitter.

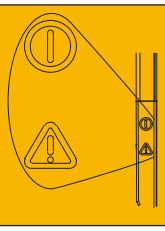

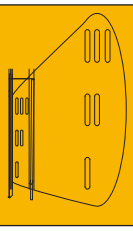

	Device status		▸ Reception quality: – III: Best quality – I: Worst quality ▸ Status of the beam coding when the protected field is interrupted
	OSSD status (protected field LED)		

LED indicator on the receiver

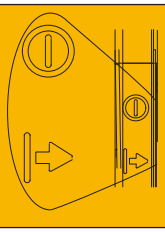



	Device status		▸ Status of the beam coding during normal operation ▸ Light beam error information
	▸ Light beam status ▸ Status of the beam coding during normal operation		

LED indicators on the transmitter

INFORMATION

The reception quality also depends on the distance.

If the distance between sender and receiver is near the max. operating range, it is not possible to achieve a very high reception quality even with optimum alignment.

However, the safety light curtain can be operated with low reception quality when the alignment is performed as described in Safety light curtain alignment [📖 31].

Status information

Legend

☼ LED on

◐ LED flashes

● LED off

Displays on the receiver

					Meaning
☼ Green	☼ Green	●	●	●	Ready for operation
		The current reception quality status is indicated			
◐ Green	◐ Red	◐ Green	◐ Green	◐ Green	Safety light curtain is started. The safety light curtain is not aligned.
☼ Green	☼ Red	●	●	●	Protected field is interrupted, Uncoded

					Meaning
Green	Red	Green	●	●	Protected field is interrupted, A-coded
Green	Red	●	Green	●	Protected field is interrupted, B-coded
Red	Red	●	●	●	OSSD fault Restart [42] the safety light curtain.
		The current coding status is indicated			
Red	Red	●	●	●	A fault has occurred. Restart [42] the safety light curtain.
		The current coding status is indicated			
Green	Green	Green	Green	Green	Stray light warning Warns of the OSSDs' change to the OFF state due to the presence of stray light.
Green	Red	Green	Green	Green	Stray light fault OSSDs have changed to the OFF state due to the presence of stray light. 1. Use the beam coding of the safety light curtain. 2. Install an opaque surface on the side facing the stray light source **or** reverse the positions of the safety light curtain's transmitter and receiver. 3. Restart [42] the safety light curtain.
Red	Red	Green	●	●	Overtemperature; OSSD in the OFF state 1. Ensure that the ambient temperature corresponds to the information in the Technical details [48]. 2. Restart [42] the safety light curtain.

					Meaning
Red	Red	●	Green	●	Undervoltage; OSSD in the OFF state 1. Ensure that the supply voltage corresponds to the information in the Technical details [48]. 2. Restart [42] the safety light curtain.

Indicators on the transmitter

				Meaning
green	red	green	green	Safety light curtain is started
green	green	●	●	Safety light curtain in operation Transmitter sends uncoded
green	green	green	●	Safety light curtain in operation Transmitter sends A-coded
green	green	●	green	Safety light curtain in operation Transmitter sends B-coded
red	red	●	●	An error has occurred. Perform a safety light curtain restart [42].
red	red	green	●	Overtemperature; OSSD in the OFF state 1. Ensure that the ambient temperature corresponds to the information in the Technical details [48]. 2. Perform a safety light curtain restart [42].
red	red	●	green	Undervoltage; OSSD in the OFF state 1. Ensure that the supply voltage corresponds to the information in the Technical details [48]. 2. Perform a safety light curtain restart [42].

Safety light grid restart

⇨ Disconnect the supply voltage from the safety light curtain and reconnect it. The automatic start [📖 14] begins.

Malfunction



DANGER!

Loss of safety function due to a malfunction of the safety light curtain

A safety light grid malfunction may lead to serious injury or death.

If there is a safety light curtain malfunction, immediately discontinue operation of the system components whose hazardous area the grid secures.

Regular checks and maintenance

Checks

Regular checks can bring to light changes to the plant/machine, safeguards and ambient conditions.

Regular check

Pilz recommends that the safety light curtain be checked every six months.

- Check the safety light curtain's front panel.
  - Scratched front panel: Replace the safety light curtain.
  - Dirty front panel: Clean the front panel [45].

    In a particularly dirty environment, front panel cleanliness should be checked more frequently.
- Check the tightness of the safety light curtain's front panel.

  All screws must be tightened to the torque specified in the Technical details [48].
- Check the safety function of the safety light curtain (see Check the safety function of the safety light curtain [36]).

Checking of safety light curtains with beam coding

When switching on the safety light curtains, the correct function of the coding must be checked.



INFORMATION

This inspection may only be carried out by qualified personnel.

The following LEDs must light after switching on:

Receiver

Status	⏻	⚠	▮▮▮	▮▮	▮
Ready for operation	☼ green	☼ green	●	●	●
			The current reception quality status is indicated.		

Transmitter

Status				
Safety light curtain in operation Transmitter sends uncoded	green	green	●	●
Safety light curtain in operation Transmitter sends A-coded	green	green	green	●
Safety light curtain in operation Transmitter sends B-coded	green	green	●	green

Check whether the coding corresponds to the specifications in Installation of several adjacent safety light curtains [22].

Check the pin assignment [33], when other displays can be seen at the safety light curtain.

Interrupt the protected field. The following LED must light at the receiver:

					Meaning
green	red	green	●	●	Protected field is interrupted, A-coded
green	red	●	green	●	Protected field is interrupted, B-coded

Check after plant/machine modification

Check the safety light curtain each time the plant/machine is modified.

The following measures should also be regarded as a modification:

- The exchange of the safety light curtain
- The exchange of components of the safety light curtain
- A changed connection of the safety light curtain (change from uncoded connection to coded connection).

You **must** comply with the requirements of the applicable national regulations.

INFORMATION

This inspection may only be carried out by qualified personnel.

The Appendix contains a Checklist [65] which should help you perform the safety check.

Maintenance

Other than cleaning the lens covers, the PSEN opII4H Series requires no other form of maintenance.



WARNING!

Loss of the safety function due to the use of improper cleaning agents

Improper cleaning agents can damage the front screen and lead to malfunctions.

– Use only the cleaning agents specified.

Moist cotton cloths should be used for cleaning.

Avoid using

- Alcohol,
- Solvents,
- Cloths made of wool,
- Cloths made of synthetic material.

Clean the lens covers during the regular check [📖 43] of the PSEN opII4H Series.

Dimensions

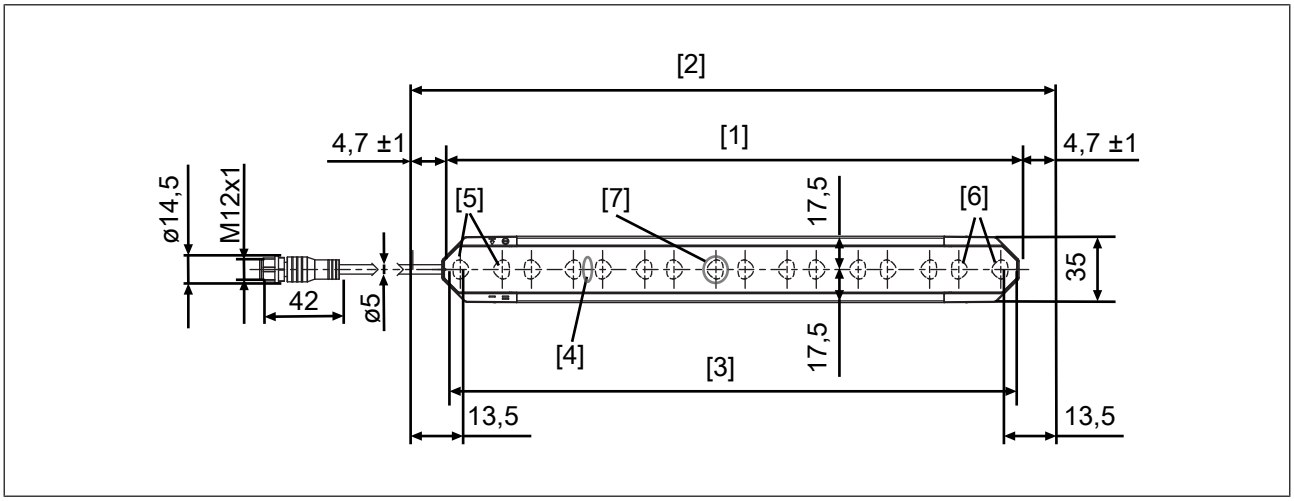

Fig.: Front view of the safety light curtain transmitter, protected field height 300-1800 mm with connection cable

Legend

[1] Total length of transmitter (without cable)

[2] Effective protected field height

[3] Protected field height (see Technical details [48])

[4] Optical centre axis

[5] Cable-side beam pair for beam synchronisation

[6] Wiring-side beam pair for beam synchronisation

[7] Eye shield

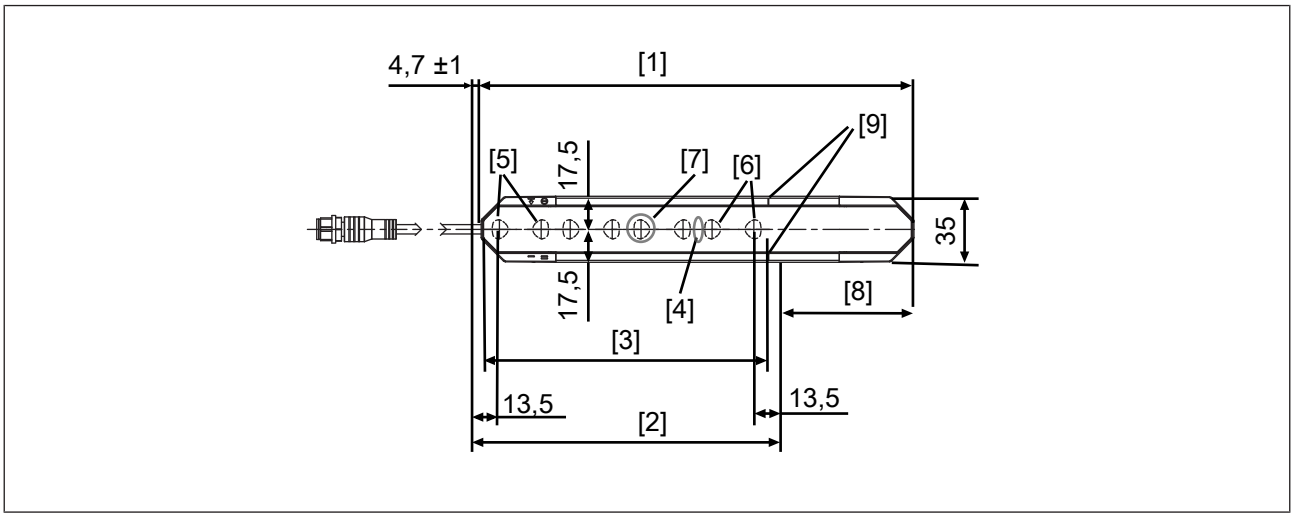

Fig.: Front view of the safety light curtain transmitter, protected field height 150 mm with connection cable

Legend

[1] Total length of transmitter (without cable)

[2] Effective protected field height

[3] Protected field height (see Technical details [48])

[4] Optical centre axis

[5] Cable-side beam pair for beam synchronisation

[6] Wiring-side beam pair for beam synchronisation

[7] Eye shield

[8] Dead zone 70.3 mm

[9] Protected field perimeter markings

Technical details Order no. 632060-632062

General	632060	632061	632062
Certifications	CE, EAC (Eurasian), KOSHA, TÜV, cULus Listed	CE, EAC (Eurasian), KOSHA, TÜV, cULus Listed	CE, EAC (Eurasian), KOSHA, TÜV, cULus Listed
ESPE type	4	4	4
Sensor's mode of operation	Infrared	Infrared	Infrared
Height of protected field	150 mm	300 mm	450 mm
Resolution			
Operating range	0,2 - 18 m	0,2 - 18 m	0,2 - 18 m
Detection capability	30 mm	30 mm	30 mm
Electrical data	**632060**	**632061**	**632062**
Supply voltage			
Voltage	24 V	24 V	24 V
Kind	DC	DC	DC
Voltage tolerance	-25 %/+20 %	-25 %/+20 %	-25 %/+20 %
Residual ripple DC	5 %	5 %	5 %
Max. power consumption OSSD in the OFF state	2,5 W	2,5 W	2,5 W
Max. voltage OSSD in the OFF state	0,2 V	0,2 V	0,2 V
Max. power consumption transmitter	1,5 W	1,5 W	1,5 W
Max. inductive load per output	1 H	1 H	1 H
Beam coding	yes	yes	yes
Optical data	**632060**	**632061**	**632062**
Opening angle	-2,5 - 2,5 deg	-2,5 - 2,5 deg	-2,5 - 2,5 deg
Used wavelength range	850 nm	850 nm	850 nm
Semiconductor outputs	**632060**	**632061**	**632062**
OSSD safety outputs	2	2	2
Switching current per output	100 mA	100 mA	100 mA
Residual current at "0" signal	0,1 mA	0,1 mA	0,1 mA
Voltage drop at OSSDs	1,5 V	1,5 V	1,5 V
Max. line capacitance at the outputs without load	40 nF	40 nF	40 nF
Times	**632060**	**632061**	**632062**
Test pulse duration, safety outputs	300 µs	300 µs	300 µs
Supply interruption before de-energisation	600 µs	600 µs	600 µs
Response time t1	5,2 ms	5,9 ms	6,5 ms
Response time (with beam coding)	11,7 ms	11,7 ms	11,7 ms

Environmental data	632060	632061	632062
Ambient temperature			
Temperature range	**-10 - 60 °C**	**-10 - 60 °C**	**-10 - 60 °C**
Storage temperature			
Temperature range	**-25 - 70 °C**	**-25 - 70 °C**	**-25 - 70 °C**
Climatic suitability			
Humidity	**95 % r. h. at 50 °C**	**95 % r. h. at 50 °C**	**95 % r. h. at 50 °C**
Condensation during operation	**Not permitted**	**Not permitted**	**Not permitted**
EMC	**EN 61496-1**	**EN 61496-1**	**EN 61496-1**
Vibration			
In accordance with the standard	**EN 60068-2-6**	**EN 60068-2-6**	**EN 60068-2-6**
Frequency	**10 - 150 Hz**	**10 - 150 Hz**	**10 - 150 Hz**
Amplitude	**0,75 mm**	**0,75 mm**	**0,75 mm**
Shock stress			
In accordance with the standard	**EN 60068-2-27**	**EN 60068-2-27**	**EN 60068-2-27**
Number of shocks	**1000**	**1000**	**1000**
Acceleration	**10g**	**10g**	**10g**
Duration	**16 ms**	**16 ms**	**16 ms**
Bracket	**Swivel-Mount**	**Swivel-Mount**	**Swivel-Mount**
In accordance with the standard	**EN 60068-2-27**	**EN 60068-2-27**	**EN 60068-2-27**
Number of shocks	**3**	**3**	**3**
Acceleration	**50g**	**50g**	**50g**
Duration	**11 ms**	**11 ms**	**11 ms**
Bracket	**Adv Bracket Kit**	**Adv Bracket Kit**	**Adv Bracket Kit**
Protection type			
Housing	**IP65**	**IP65**	**IP65**
Mechanical data	**632060**	**632061**	**632062**
Min. bending radius (fixed permanently) K1	**5 x Ø**	**5 x Ø**	**5 x Ø**
Min. bending radius (moving) K1	**10 x Ø**	**10 x Ø**	**10 x Ø**
Connection type			
Receiver	**M12, 5-pin male connector**	**M12, 5-pin male connector**	**M12, 5-pin male connector**
Transmitter	**M12, 5-pin male connector**	**M12, 5-pin male connector**	**M12, 5-pin male connector**
Max. cable length	**50 m**	**50 m**	**50 m**
Material			
Housing	**Aluminium**	**Aluminium**	**Aluminium**
End caps	**Zn**	**Zn**	**Zn**
Front screen	**PC**	**PC**	**PC**

Mechanical data	632060	632061	632062
Max. torque setting			
Clamping screw	**1,1 Nm**	**1,1 Nm**	**1,1 Nm**
Installation screw	**3 Nm**	**3 Nm**	**3 Nm**
Fixing screw	**0,7 Nm**	**0,7 Nm**	**0,7 Nm**
Dimensions			
Height	**229 mm**	**304 mm**	**454 mm**
Width	**35 mm**	**35 mm**	**35 mm**
Depth	**40 mm**	**40 mm**	**40 mm**
Weight	**765 g**	**1.010 g**	**1.415 g**

Where standards are undated, the 2015-12 latest editions shall apply.

Technical details Order no. 632063-632065

General	632063	632064	632065
Certifications	**CE, EAC (Eurasian), KOSHA, TÜV, cULus Listed**	**CE, EAC (Eurasian), KOSHA, TÜV, cULus Listed**	**CE, EAC (Eurasian), KOSHA, TÜV, cULus Listed**
ESPE type	**4**	**4**	**4**
Sensor's mode of operation	**Infrared**	**Infrared**	**Infrared**
Height of protected field	**600 mm**	**750 mm**	**900 mm**
Resolution			
Operating range	**0,2 - 18 m**	**0,2 - 18 m**	**0,2 - 18 m**
Detection capability	**30 mm**	**30 mm**	**30 mm**
Electrical data	**632063**	**632064**	**632065**
Supply voltage			
Voltage	**24 V**	**24 V**	**24 V**
Kind	**DC**	**DC**	**DC**
Voltage tolerance	**-25 %/+20 %**	**-25 %/+20 %**	**-25 %/+20 %**
Residual ripple DC	**5 %**	**5 %**	**5 %**
Max. power consumption OSSD in the OFF state	**2,5 W**	**2,5 W**	**2,5 W**
Max. voltage OSSD in the OFF state	**0,2 V**	**0,2 V**	**0,2 V**
Max. power consumption transmitter	**1,5 W**	**1,5 W**	**1,5 W**
Max. inductive load per output	**1 H**	**1 H**	**1 H**
Beam coding	**yes**	**yes**	**yes**
Optical data	**632063**	**632064**	**632065**
Opening angle	**-2,5 - 2,5 deg**	**-2,5 - 2,5 deg**	**-2,5 - 2,5 deg**
Used wavelength range	**850 nm**	**850 nm**	**850 nm**
Semiconductor outputs	**632063**	**632064**	**632065**
OSSD safety outputs	**2**	**2**	**2**

Semiconductor outputs	632063	632064	632065
Switching current per output	100 mA	100 mA	100 mA
Residual current at "0" signal	0,1 mA	0,1 mA	0,1 mA
Voltage drop at OSSDs	1,5 V	1,5 V	1,5 V
Max. line capacitance at the outputs without load	40 nF	40 nF	40 nF
Times	**632063**	**632064**	**632065**
Test pulse duration, safety outputs	300 µs	300 µs	300 µs
Supply interruption before de-energisation	600 µs	600 µs	600 µs
Response time t1	7,2 ms	7,8 ms	8,4 ms
Response time (with beam coding)	15,2 ms	15,2 ms	15,2 ms
Environmental data	**632063**	**632064**	**632065**
Ambient temperature			
Temperature range	-10 - 60 °C	-10 - 60 °C	-10 - 60 °C
Storage temperature			
Temperature range	-25 - 70 °C	-25 - 70 °C	-25 - 70 °C
Climatic suitability			
Humidity	95 % r. h. at 50 °C	95 % r. h. at 50 °C	95 % r. h. at 50 °C
Condensation during operation	Not permitted	Not permitted	Not permitted
EMC	EN 61496-1	EN 61496-1	EN 61496-1
Vibration			
In accordance with the standard	EN 60068-2-6	EN 60068-2-6	EN 60068-2-6
Frequency	10 - 150 Hz	10 - 150 Hz	10 - 150 Hz
Amplitude	0,75 mm	0,75 mm	0,75 mm
Shock stress			
In accordance with the standard	EN 60068-2-27	EN 60068-2-27	EN 60068-2-27
Number of shocks	1000	1000	1000
Acceleration	10g	10g	10g
Duration	16 ms	16 ms	16 ms
Bracket	Swivel-Mount	Swivel-Mount	Swivel-Mount
In accordance with the standard	EN 60068-2-27	EN 60068-2-27	EN 60068-2-27
Number of shocks	3	3	3
Acceleration	50g	50g	50g
Duration	11 ms	11 ms	11 ms
Bracket	Adv Bracket Kit	Adv Bracket Kit	Adv Bracket Kit
Protection type			
Housing	IP65	IP65	IP65

Mechanical data	632063	632064	632065
Min. bending radius (fixed permanently) K1	**5 x Ø**	**5 x Ø**	**5 x Ø**
Min. bending radius (moving) K1	**10 x Ø**	**10 x Ø**	**10 x Ø**
Connection type			
Receiver	**M12, 5-pin male connector**	**M12, 5-pin male connector**	**M12, 5-pin male connector**
Transmitter	**M12, 5-pin male connector**	**M12, 5-pin male connector**	**M12, 5-pin male connector**
Max. cable length	**50 m**	**50 m**	**50 m**
Material			
Housing	**Aluminium**	**Aluminium**	**Aluminium**
End caps	**Zn**	**Zn**	**Zn**
Front screen	**PC**	**PC**	**PC**
Max. torque setting			
Clamping screw	**1,1 Nm**	**1,1 Nm**	**1,1 Nm**
Installation screw	**3 Nm**	**3 Nm**	**3 Nm**
Fixing screw	**0,7 Nm**	**0,7 Nm**	**0,7 Nm**
Dimensions			
Height	**604 mm**	**754 mm**	**904 mm**
Width	**35 mm**	**35 mm**	**35 mm**
Depth	**40 mm**	**40 mm**	**40 mm**
Weight	**1.820 g**	**2.225 g**	**2.630 g**

Where standards are undated, the 2015-12 latest editions shall apply.

Technical details Order no. 632066-632068

General	632066	632067	632068
Certifications	**CE, EAC (Eurasian), KOSHA, TÜV, cULus Listed**	**CE, EAC (Eurasian), KOSHA, TÜV, cULus Listed**	**CE, EAC (Eurasian), KOSHA, TÜV, cULus Listed**
ESPE type	**4**	**4**	**4**
Sensor's mode of operation	**Infrared**	**Infrared**	**Infrared**
Height of protected field	**1.050 mm**	**1.200 mm**	**1.350 mm**
Resolution			
Operating range	**0,2 - 18 m**	**0,2 - 18 m**	**0,2 - 18 m**
Detection capability	**30 mm**	**30 mm**	**30 mm**
Electrical data	**632066**	**632067**	**632068**
Supply voltage			
Voltage	**24 V**	**24 V**	**24 V**
Kind	**DC**	**DC**	**DC**
Voltage tolerance	**-25 %/+20 %**	**-25 %/+20 %**	**-25 %/+20 %**
Residual ripple DC	**5 %**	**5 %**	**5 %**

Electrical data	632066	632067	632068
Max. power consumption OSSD in the OFF state	2,5 W	2,5 W	2,5 W
Max. voltage OSSD in the OFF state	0,2 V	0,2 V	0,2 V
Max. power consumption transmitter	1,5 W	1,5 W	1,5 W
Max. inductive load per output	1 H	1 H	1 H
Beam coding	yes	yes	yes
Optical data	**632066**	**632067**	**632068**
Opening angle	-2,5 - 2,5 deg	-2,5 - 2,5 deg	-2,5 - 2,5 deg
Used wavelength range	850 nm	850 nm	850 nm
Semiconductor outputs	**632066**	**632067**	**632068**
OSSD safety outputs	2	2	2
Switching current per output	100 mA	100 mA	100 mA
Residual current at "0" signal	0,1 mA	0,1 mA	0,1 mA
Voltage drop at OSSDs	1,5 V	1,5 V	1,5 V
Max. line capacitance at the outputs without load	40 nF	40 nF	40 nF
Times	**632066**	**632067**	**632068**
Test pulse duration, safety outputs	300 µs	300 µs	300 µs
Supply interruption before de-energisation	600 µs	600 µs	600 µs
Response time t1	9,1 ms	9,7 ms	10,4 ms
Response time (with beam coding)	22,3 ms	22,3 ms	22,3 ms
Environmental data	**632066**	**632067**	**632068**
Ambient temperature			
Temperature range	-10 - 60 °C	-10 - 60 °C	-10 - 60 °C
Storage temperature			
Temperature range	-25 - 70 °C	-25 - 70 °C	-25 - 70 °C
Climatic suitability			
Humidity	95 % r. h. at 50 °C	95 % r. h. at 50 °C	95 % r. h. at 50 °C
Condensation during operation	Not permitted	Not permitted	Not permitted
EMC	EN 61496-1	EN 61496-1	EN 61496-1
Vibration			
In accordance with the standard	EN 60068-2-6	EN 60068-2-6	EN 60068-2-6
Frequency	10 - 150 Hz	10 - 150 Hz	10 - 150 Hz
Amplitude	0,75 mm	0,75 mm	0,75 mm

Environmental data	632066	632067	632068
Shock stress			
In accordance with the standard	**EN 60068-2-27**	**EN 60068-2-27**	**EN 60068-2-27**
Number of shocks	**1000**	**1000**	**1000**
Acceleration	**10g**	**10g**	**10g**
Duration	**16 ms**	**16 ms**	**16 ms**
Bracket	**Swivel-Mount**	**Swivel-Mount**	**Swivel-Mount**
In accordance with the standard	**EN 60068-2-27**	**EN 60068-2-27**	**EN 60068-2-27**
Number of shocks	**3**	**3**	**3**
Acceleration	**50g**	**50g**	**50g**
Duration	**11 ms**	**11 ms**	**11 ms**
Bracket	**Adv Bracket Kit**	**Adv Bracket Kit**	**Adv Bracket Kit**
Protection type			
Housing	**IP65**	**IP65**	**IP65**
Mechanical data	**632066**	**632067**	**632068**
Min. bending radius (fixed permanently) K1	**5 x Ø**	**5 x Ø**	**5 x Ø**
Min. bending radius (moving) K1	**10 x Ø**	**10 x Ø**	**10 x Ø**
Connection type			
Receiver	**M12, 5-pin male connector**	**M12, 5-pin male connector**	**M12, 5-pin male connector**
Transmitter	**M12, 5-pin male connector**	**M12, 5-pin male connector**	**M12, 5-pin male connector**
Max. cable length	**50 m**	**50 m**	**50 m**
Material			
Housing	**Aluminium**	**Aluminium**	**Aluminium**
End caps	**Zn**	**Zn**	**Zn**
Front screen	**PC**	**PC**	**PC**
Max. torque setting			
Clamping screw	**1,1 Nm**	**1,1 Nm**	**1,1 Nm**
Installation screw	**3 Nm**	**3 Nm**	**3 Nm**
Fixing screw	**0,7 Nm**	**0,7 Nm**	**0,7 Nm**
Dimensions			
Height	**1.054 mm**	**1.204 mm**	**1.354 mm**
Width	**35 mm**	**35 mm**	**35 mm**
Depth	**40 mm**	**40 mm**	**40 mm**
Weight	**3.035 g**	**3.440 g**	**3.845 g**

Where standards are undated, the 2015-12 latest editions shall apply.

Technical details Order no. 632069-632071

General	632069	632070	632071
Certifications	CE, EAC (Eurasian), KOSHA, TÜV, cULus Listed	CE, EAC (Eurasian), KOSHA, TÜV, cULus Listed	CE, EAC (Eurasian), KOSHA, TÜV, cULus Listed
ESPE type	4	4	4
Sensor's mode of operation	Infrared	Infrared	Infrared
Height of protected field	1.500 mm	1.650 mm	1.800 mm
Resolution			
Operating range	0,2 - 18 m	0,2 - 18 m	0,2 - 18 m
Detection capability	30 mm	30 mm	30 mm
Electrical data	**632069**	**632070**	**632071**
Supply voltage			
Voltage	24 V	24 V	24 V
Kind	DC	DC	DC
Voltage tolerance	-25 %/+20 %	-25 %/+20 %	-25 %/+20 %
Residual ripple DC	5 %	5 %	5 %
Max. power consumption OSSD in the OFF state	2,5 W	2,5 W	2,5 W
Max. voltage OSSD in the OFF state	0,2 V	0,2 V	0,2 V
Max. power consumption transmitter	1,5 W	1,5 W	1,5 W
Max. inductive load per output	1 H	1 H	1 H
Beam coding	yes	yes	yes
Optical data	**632069**	**632070**	**632071**
Opening angle	-2,5 - 2,5 deg	-2,5 - 2,5 deg	-2,5 - 2,5 deg
Used wavelength range	850 nm	850 nm	850 nm
Semiconductor outputs	**632069**	**632070**	**632071**
OSSD safety outputs	2	2	2
Switching current per output	100 mA	100 mA	100 mA
Residual current at "0" signal	0,1 mA	0,1 mA	0,1 mA
Voltage drop at OSSDs	1,5 V	1,5 V	1,5 V
Max. line capacitance at the outputs without load	40 nF	40 nF	40 nF
Times	**632069**	**632070**	**632071**
Test pulse duration, safety outputs	300 µs	300 µs	300 µs
Supply interruption before de-energisation	600 µs	600 µs	600 µs
Response time t1	11 ms	11,6 ms	12,3 ms
Response time (with beam coding)	22,3 ms	22,3 ms	22,3 ms

Environmental data	632069	632070	632071
Ambient temperature			
Temperature range	**-10 - 60 °C**	**-10 - 60 °C**	**-10 - 60 °C**
Storage temperature			
Temperature range	**-25 - 70 °C**	**-25 - 70 °C**	**-25 - 70 °C**
Climatic suitability			
Humidity	**95 % r. h. at 50 °C**	**95 % r. h. at 50 °C**	**95 % r. h. at 50 °C**
Condensation during operation	**Not permitted**	**Not permitted**	**Not permitted**
EMC	**EN 61496-1**	**EN 61496-1**	**EN 61496-1**
Vibration			
In accordance with the standard	**EN 60068-2-6**	**EN 60068-2-6**	**EN 60068-2-6**
Frequency	**10 - 150 Hz**	**10 - 150 Hz**	**10 - 150 Hz**
Amplitude	**0,75 mm**	**0,75 mm**	**0,75 mm**
Shock stress			
In accordance with the standard	**EN 60068-2-27**	**EN 60068-2-27**	**EN 60068-2-27**
Number of shocks	**1000**	**1000**	**1000**
Acceleration	**10g**	**10g**	**10g**
Duration	**16 ms**	**16 ms**	**16 ms**
Bracket	**Swivel-Mount**	**Swivel-Mount**	**Swivel-Mount**
In accordance with the standard	**EN 60068-2-27**	**EN 60068-2-27**	**EN 60068-2-27**
Number of shocks	**3**	**3**	**3**
Acceleration	**50g**	**50g**	**50g**
Duration	**11 ms**	**11 ms**	**11 ms**
Bracket	**Adv Bracket Kit**	**Adv Bracket Kit**	**Adv Bracket Kit**
Protection type			
Housing	**IP65**	**IP65**	**IP65**
Mechanical data	**632069**	**632070**	**632071**
Min. bending radius (fixed permanently) K1	**5 x Ø**	**5 x Ø**	**5 x Ø**
Min. bending radius (moving) K1	**10 x Ø**	**10 x Ø**	**10 x Ø**
Connection type			
Receiver	**M12, 5-pin male connector**	**M12, 5-pin male connector**	**M12, 5-pin male connector**
Transmitter	**M12, 5-pin male connector**	**M12, 5-pin male connector**	**M12, 5-pin male connector**
Max. cable length	**50 m**	**50 m**	**50 m**
Material			
Housing	**Aluminium**	**Aluminium**	**Aluminium**
End caps	**Zn**	**Zn**	**Zn**
Front screen	**PC**	**PC**	**PC**

Mechanical data	632069	632070	632071
Max. torque setting			
Clamping screw	**1,1 Nm**	**1,1 Nm**	**1,1 Nm**
Installation screw	**3 Nm**	**3 Nm**	**3 Nm**
Fixing screw	**0,7 Nm**	**0,7 Nm**	**0,7 Nm**
Dimensions			
Height	**1.504 mm**	**1.654 mm**	**1.804 mm**
Width	**35 mm**	**35 mm**	**35 mm**
Depth	**40 mm**	**40 mm**	**40 mm**
Weight	**4.250 g**	**4.655 g**	**5.060 g**

Where standards are undated, the 2015-12 latest editions shall apply.

Classification according to ZVEI, CB24I

The following tables describe the classes and specific values of the product interface and the classes of interfaces compatible with it. The classification is described in the ZVEI position paper "Classification of Binary 24 V Interfaces - Functional Safety aspects covered by dynamic testing".

Safe 1-pole HL outputs

Source			Drain	
Safety switch	C2		Evaluation device	C1, C2

Source parameters	Min.	Typ.	Max.
Test impulse duration	-	-	300 µs
Rated current	-	-	0,1 A
Capacitive load	-	-	40 nF

Safety characteristic data

NOTICE

You must comply with the safety characteristic data in order to achieve the required safety level for your plant/machine.

Operating mode	EN ISO 13849-1: 2015 PL	EN ISO 13849-1: 2015 Category	EN 62061 SIL CL	EN 62061 PFH_D [1/h]	IEC 61511 SIL	IEC 61511 PFD	EN ISO 13849-1: 2015 T_M [year]
2-ch. OSSD	**PL e**	**Cat. 4**	**SIL CL 3**	**1,10E-08**	–	**1,86E-05**	**20**

Explanatory notes for the safety-related characteristic data:

- The SIL CL value in accordance with EN 62061 corresponds to the SIL value in accordance with EN 61508.
- T_M is the maximum mission time in accordance with EN ISO 13849-1. The value also applies as the retest interval in accordance with EN 61508-6 and IEC 61511 and as the proof test interval and mission time in accordance with EN 62061.

All the units used within a safety function must be considered when calculating the safety characteristic data.

INFORMATION

A safety function's SIL/PL values are **not** identical to the SIL/PL values of the units that are used and may be different. We recommend that you use the PAScal software tool to calculate the safety function's SIL/PL values.

Order reference

Order reference for safety light curtains

Product type	Features	Order no.
PSEN opII4H-S-30-015	Safety light curtain for hand protection, protected field height of 150 mm	632 060
PSEN opII4H-S-30-030	Safety light curtain for hand protection, protected field height of 300 mm	632 061
PSEN opII4H-S-30-045	Safety light curtain for hand protection, protected field height of 450 mm	632 062
PSEN opII4H-S-30-060	Safety light curtain for hand protection, protected field height of 600 mm	632 063
PSEN opII4H-S-30-075	Safety light curtain for hand protection, protected field height of 750 mm	632 064
PSEN opII4H-S-30-090	Safety light curtain for hand protection, protected field height of 900 mm	632 065
PSEN opII4H-S-30-105	Safety light curtain for hand protection, protected field height of 1050 mm	632 066
PSEN opII4H-S-30-120	Safety light curtain for hand protection, protected field height of 1200 mm	632 067
PSEN opII4H-S-30-135	Safety light curtain for hand protection, protected field height of 1350 mm	632 068
PSEN opII4H-S-30-150	Safety light curtain for hand protection, protected field height of 1500 mm	632 069
PSEN opII4H-S-30-165	Safety light curtain for hand protection, protected field height of 1650 mm	632 070
PSEN opII4H-S-30-180	Safety light curtain for hand protection, protected field height of 1800 mm	632 071

Order reference for accessories

Standard installation kit

Product type	Features	Order No.
PSEN opII Bracket Kit	Standard installation with flexible bracket	632 015

Expanded mounting kit

Product type	Features	Order No.
PSEN opII Adv Bracket Kit-2	Four-piece expanded mounting kit with three degrees of freedom for an absence of dead zones for protected field heights from 150 mm up to and including 600 mm (for hand or finger protection) from 450 mm up to and including 600 mm (for body protection)	632 016
PSEN opII Adv Bracket Kit-3	Six-piece expanded mounting kit with three degrees of freedom for an absence of dead zones for protected field heights from 750 mm up to and including 1200 mm	632 017

Laser orientation aid

Product type	Features	Order No.
PSEN opII laser pointer	Laser orientation aid for safety light curtain from the PSEN opII series	632 014

Protection of the safety light curtain

Product type	Features	Height	Order no.
PSEN op Protective Column-060/1	Protective column for safety light curtain	600 mm	630 950
PSEN op Protective Column-090/1	Protective column for safety light curtain	900 mm	630 951
PSEN op Protective Column-120/1	Protective column for safety light curtain	1200 mm	630 952
PSEN op Protective Column-165/1	Protective column for safety light curtain	1650 mm	630 953
PSEN op Protective Column-190/1	Protective column for safety light curtain	1900 mm	630 954
PSEN op lens shield-015/1	PMMA plated to protect the front screen of a safety light curtain	15 cm	630 910
PSEN op lens shield-030/1	PMMA plated to protect the front screen of a safety light curtain	30 cm	630 911
PSEN op lens shield-045/1	PMMA plated to protect the front screen of a safety light curtain	45 cm	630 912
PSEN op lens shield-060/1	PMMA plated to protect the front screen of a safety light curtain	60 cm	630 913
PSEN op lens shield-075/1	PMMA plated to protect the front screen of a safety light curtain	75 cm	630 914
PSEN op lens shield-090/1	PMMA plated to protect the front screen of a safety light curtain	90 cm	630 915
PSEN op lens shield-105/1	PMMA plated to protect the front screen of a safety light curtain	105 cm	630 916
PSEN op lens shield-120/1	PMMA plated to protect the front screen of a safety light curtain	120 cm	630 917

Product type	Features	Height	Order no.
PSEN op lens shield-135/1	PMMA plated to protect the front screen of a safety light curtain	135 cm	630 918
PSEN op lens shield-150/1	PMMA plated to protect the front screen of a safety light curtain	150 cm	630 919
PSEN op lens shield-165/1	PMMA plated to protect the front screen of a safety light curtain	165 cm	630 920
PSEN op lens shield-180/1	PMMA plated to protect the front screen of a safety light curtain	180 cm	630 921

Test object

Product type	Features	Order No.
PSEN opII Test-piece F 30 mm	Test rod for safety light curtain with hand protection, ⌀30 mm	632 019

Connection to PDP67

Product type	Features	Connector X1	Connector X2	Connector X3	Order no.
PSS67 Cable M12sf M12sm, 3m	3 m	M12, 5-pin female connector, straight	M12, 5-pin male connector, straight		380 208
PSS67 Cable M12sf M12sm, 5m	5 m	M12, 5-pin female connector, straight	M12, 5-pin male connector, straight		380 209
PSS67 Cable M12sf M12sm, 10m	10 m	M12, 5-pin female connector, straight	M12, 5-pin male connector, straight		380 210
PSS67 cable M12-5sf, M12-5sm, 20m	20 m	M12, 5-pin female connector, straight	M12, 5-pin male connector, straight		380 220
PSS67 Cable M12sf M12sm, 30m	30 m	M12, 5-pin female connector, straight	M12, 5-pin male connector, straight		380 211
PSS67 Cable M12af M12am, 3m	3 m	M12, 5-pin female connector, angled	M12, 5-pin male connector, angled		380 212
PSS67 Cable M12af M12am, 5m	5 m	M12, 5-pin female connector, angled	M12, 5-pin male connector, angled		380 213
PSS67 Cable M12af M12am, 10m	10 m	M12, 5-pin female connector, angled	M12, 5-pin male connector, angled		380 214
PSS67 Cable M12af M12am, 30m	30 m	M12, 5-pin female connector, angled	M12, 5-pin male connector, angled		380 215

Connection to other evaluation devices

Product type	Features	Connector X1	Connector X2	Connector X3	Order no.
PSEN op cable axial M12 5-pole 3m	3 m	M12, 5-pin female connector, straight			630 310
PSEN op cable axial M12 5-pole 5m	5 m	M12, 5-pin female connector, straight			630 311
PSEN op cable axial M12 5-pole 10m	10 m	M12, 5-pin female connector, straight			630 312
PSEN cable M12-5sf 20m	20 m	M12, 5-pin female connector, straight			630 298
PSEN op cable axial M12 5-pole 30m	30 m	M12, 5-pin female connector, straight			630 297
PSEN op cable axial M12 5-pole 50m	50 m	M12, 5-pin female connector, straight			630 364
PSEN op cable angle M12 5-pole 3m	3 m	M12, 5-pin female connector, angled			630 347
PSEN op cable angle M12 5-pole 5m	5 m	M12, 5-pin female connector, angled			630 348
PSEN op cable angle M12 5-pole 10m	10 m	M12, 5-pin female connector, angled			630 349
PSEN op cable angle M12 5-pole 30m	30 m	M12, 5-pin female connector, angled			630 350
PSEN op cable angle M12 5-pole 50m	50 m	M12, 5-pin female connector, angled			630 365

Mirror column set

consisting of

- PSEN opII mirror column-xxx,
- PSEN opII adjustable base unit and
- Floor anchor PSEN screw set mirror column

Product type	Features	Height	Order no.
PSEN opII mirror column-060 Set	with PSEN opII mirror column-060	60 cm	632 007
PSEN opII mirror column-090 Set	with PSEN opII mirror column-090	90 cm	632 008
PSEN opII mirror column-120 Set	with PSEN opII mirror column-120	120 cm	632 009
PSEN opII mirror column-165 Set	with PSEN opII mirror column-165	165 cm	632 010
PSEN opII mirror column-195 Set	with PSEN opII mirror column-195	195 cm	632 011

Mirror columns

Individual mirror column (without PSEN opII adjustable base unit)

Product type	Features	Height	Order no.
PSEN opII mirror column-060	Mirror column (deviating mirror in protective column)	60 cm	632 032
PSEN opII mirror column-090	Mirror column (deviating mirror in protective column)	90 cm	632 033
PSEN opII mirror column-120	Mirror column (deviating mirror in protective column)	120 cm	632 034
PSEN opII mirror column-165	Mirror column (deviating mirror in protective column)	165 cm	632 035
PSEN opII mirror column-195	Mirror column (deviating mirror in protective column)	195 cm	632 036

Order reference: Component parts

Transmitter

Product type	Features	Order no.
PSEN opII4H-s-30-015 emitter	For safety light curtain for hand protection, protected field height of 150 mm	632260
PSEN opII4H-s-30-030 emitter	For safety light curtain for hand protection, protected field height of 300 mm	632261
PSEN opII4H-s-30-045 emitter	For safety light curtain for hand protection, protected field height of 450 mm	632262
PSEN opII4H-s-30-060 emitter	For safety light curtain for hand protection, protected field height of 600 mm	632263

Product type	Features	Order no.
PSEN opII4H-s-30-075 emitter	For safety light curtain for hand protection, protected field height of 750 mm	632264
PSEN opII4H-s-30-090 emitter	For safety light curtain for hand protection, protected field height of 900 mm	632265
PSEN opII4H-s-30-105 emitter	For safety light curtain for hand protection, protected field height of 1050 mm	632266
PSEN opII4H-s-30-120 emitter	For safety light curtain for hand protection, protected field height of 1200 mm	632267
PSEN opII4H-s-30-135 emitter	For safety light curtain for hand protection, protected field height of 1350 mm	632268
PSEN opII4H-s-30-150 emitter	For safety light curtain for hand protection, protected field height of 1500 mm	632269
PSEN opII4H-s-30-165 emitter	For safety light curtain for hand protection, protected field height of 1650 mm	632270
PSEN opII4H-s-30-180 emitter	For safety light curtain for hand protection, protected field height of 1800 mm	632271

Receiver

Product type	Features	Order no.
PSEN opII4H-s-30-015 receiver	For safety light curtain for hand protection, protected field height of 150 mm	632360
PSEN opII4H-s-30-030 receiver	For safety light curtain for hand protection, protected field height of 300 mm	632361
PSEN opII4H-s-30-045 receiver	For safety light curtain for hand protection, protected field height of 450 mm	632362
PSEN opII4H-s-30-060 receiver	For safety light curtain for hand protection, protected field height of 600 mm	632363
PSEN opII4H-s-30-075 receiver	For safety light curtain for hand protection, protected field height of 750 mm	632364
PSEN opII4H-s-30-090 receiver	For safety light curtain for hand protection, protected field height of 900 mm	632365
PSEN opII4H-s-30-105 receiver	For safety light curtain for hand protection, protected field height of 1050 mm	632366
PSEN opII4H-s-30-120 receiver	For safety light curtain for hand protection, protected field height of 1200 mm	632367
PSEN opII4H-s-30-135 receiver	For safety light curtain for hand protection, protected field height of 1350 mm	632368
PSEN opII4H-s-30-150 receiver	For safety light curtain for hand protection, protected field height of 1500 mm	632369
PSEN opII4H-s-30-165 receiver	For safety light curtain for hand protection, protected field height of 1650 mm	632370
PSEN opII4H-s-30-180 receiver	For safety light curtain for hand protection, protected field height of 1800 mm	632371

Appendix

Check list

The checklist below is intended as an aid in for the following work on a safety light curtain of PSEN opII4H Series:

- commissioning,
- recommissioning, and
- running the specified regular check.

Note that the check list is not intended to replace the plant-specific safety analysis required for commissioning/recommissioning, nor the resulting inspections and actions.



INFORMATION

Commissioning, recommissioning and regular inspection may only be carried out by qualified personnel.

We recommend that you keep the completed check list and store it with the machine documentation for reference.

No.	Action	OK	NOT OK	Notes
1	**Check the category/standards**			
	Does the category of the safety light curtain match the category required for the plant/ machine?			
	Have the standards applicable for the plant/ machine been considered?			
2	**Check the safety light curtain ambient conditions**			
	Have the environmental conditions been met (see Ambient conditions [📖 16])?			
	Have the technical details been met for all the safety light curtain components?			
3	**Check access to the danger zone** Are all access points to the danger zone safeguarded either by safety light curtains or by mechanical safeguards?			

No.	Action	OK	NOT OK	Notes
4	**Check minimum distance to danger zone**			
	Has the minimum distance been calculated in accordance with the applicable standards?			
	Has the minimum distance been determined with the response time according to the beam coding (see Technical details [48])?			
	Has the calculated minimum distance been maintained at all points?			
5	**Check protected field**			
	Has the ability to creep underneath the protected field undetected been excluded?			
6	**Check safety light curtain**			
	Make sure that there are no objects in front of the safety light curtain (trailing cable, crossbeams, struts, covers, etc.).			
	Make sure that there are no transparent materials between the monitored protected field and the safety light curtain (such as the glass panel).			
	Are all the mechanical connections on the safety light curtain attached correctly?			
	Are all the electrical connections to the safety light curtain wired correctly?			
	It the beam coding displayed correctly at the transmitter?			
7	**Check the effectiveness of the safety light curtain during the hazardous movement** Is the safety light curtain effective throughout the whole of the plant/machine's hazardous movement?			
8	**Check the output circuitry of the programmable safety and control system**			
	Have OSSDs been incorporated as required for the desired safety category?			
	Are the switching elements that are connected to the OSSDs (valves, contactors, etc.) monitored with feedback loops?			
	Does the wiring of the OSSDs match the circuit diagram?			

No.	Action	OK	NOT OK	Notes
9	**Check guard function for protected field of the safety light curtain:** Interrupt the protected field at various points: The hazardous movement must be shut down.			
10	**Switch off safety light curtain** Is the hazardous movement stopped immediately when you switch off?			

EC declaration of conformity

This product/these products meet the requirements of the directive 2006/42/EC for machinery of the European Parliament and of the Council. The complete EC Declaration of Conformity is available on the Internet at www.pilz.com/downloads.
Authorised representative: Norbert Fröhlich, Pilz GmbH & Co. KG, Felix-Wankel-Str. 2, 73760 Ostfildern, Germany

Support

Technical support is available from Pilz round the clock.

Americas
Brazil
+55 11 97569-2804
Canada
+1 888-315-PILZ (315-7459)
Mexico
+52 55 5572 1300
USA (toll-free)
+1 877-PILZUSA (745-9872)

Asia
China
+86 21 60880878-216
Japan
+81 45 471-2281
South Korea
+82 31 450 0680

Australia
+61 3 95600621

Europe
Austria
+43 1 7986263-0
Belgium, Luxembourg
+32 9 3217575
France
+33 3 88104000
Germany
+49 711 3409-444
Ireland
+353 21 4804983
Italy, Malta
+39 0362 1826711
Scandinavia
+45 74436332
Spain
+34 938497433
Switzerland
+41 62 88979-30
The Netherlands
+31 347 320477
Turkey
+90 216 5775552
United Kingdom
+44 1536 462203

You can reach our international hotline on:
+49 711 3409-444
support@pilz.com

Pilz develops environmentally-friendly products using ecological materials and energy-saving technologies. Offices and production facilities are ecologically designed, environmentally-aware and energy-saving. So Pilz offers sustainability, plus the security of using energy-efficient products and environmentally-friendly solutions.

Energy saving by Pilz

BLUECOMPETENCE Alliance Member
Partner of the Engineering Industry Sustainability Initiative

pilz
Partner of:
The Best of German Engineering

Pilz GmbH & Co. KG
Felix-Wankel-Straße 2
73760 Ostfildern, Germany
Tel.: +49 711 3409-0
Fax: +49 711 3409-133
info@pilz.com
www.pilz.com

PILZ
THE SPIRIT OF SAFETY

1003501-EN-07, 2019-03 Printed in Germany
© Pilz GmbH & Co. KG, 2015

CMSE®, InduraNET p®, PAS4000®, PAScal®, PASconfig®, Pilz®, PIT®, PLID®, PMCprimo®, PMCprotego®, PMCtendo®, PMD®, PMI®, PNOZ®, Primo®, PSEN®, PSS®, PVIS®, SafetyBUS SafetyEYE®, SafetyNET p®, THE SPIRIT OF SAFETY® are registered and protected trademarks of Pilz GmbH & Co. KG in some countries. We would point out that product features m from the details stated in this document, depending on the status at the time of publication and the scope of the equipment. We accept no responsibility for the validity, accuracy and entirety of the text and graphics presented in this information. Please contact our Technical Support if you have any questions.