CONNECTORS

EN 175301-803, industry standard form B (11 mm)
ISO 4400 / EN 175301-803, form A (18 mm)
sizes 22 and 30

Series **881**

FEATURES

- *Spade connector sizes 22 and 30 to fit standardised three-pin moulded coils:*
  - *size 22, EN 175301-803, industry standard form B (11 mm), for coil types CM5, CM22, C22A, EMX and BMX*
  - *size 30, ISO 4400 / EN 175301-803 form A (18 mm), for coil types CM6, CMXX, CM12, CM25, C25A, CM30, CM40, ANX, AMX, JMX, FNX and FMX*
- *The connectors are available in three versions: standard rotatable version with or without integrated visual LED indicator and electrical protection, or version with non-rotatable 3-core moulded-in cable, 2 m long*
- *The standard connector size 30 is provided with a removable lid allowing access to the wiring for easy checking of power supply without unplugging the connector and without interrupting operation of the solenoid valve*



GENERAL

Connector specification	
size 22 (11 mm)	EN 175301-803 industry standard form B
size 30 (18 mm)	ISO 4400 / EN 175301-803, form A
Max. operating temperature	-40°C to +80°C (-40°C to +125°C [1] with silicone seal) [version with moulded-in cable -5°C to +70°C]

CONSTRUCTION

Standard version	PA (polyamide), glass-fibre reinforced
Enclosure with LED and protection	PA
Enclosure with PVC cable	PA (polyamide), glass-fibre reinforced
Seals	NBR [option for size 30: VMQ (silicone)]

ELECTRICAL CHARACTERISTICS

	Size 22	**Size 30**
Number of contacts	2 + common earth	2 + common earth
Distance between contacts	**11 mm**	**18 mm**
Contact resistance	≤ 4 m Ω	≤ 4 m Ω
Connector	Spade plug	Spade plug
Electrical safety	IEC 335	IEC 335
Electrical enclosure protection	IP65 (EN 60529)	IP65 (EN 60529)
Number of wires (with cable)	3	3

LED indicator and electrical protection diagrams

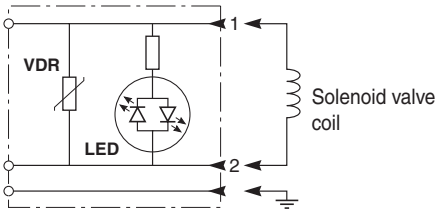

connector size 22

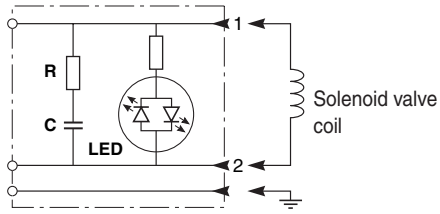

connector size 30

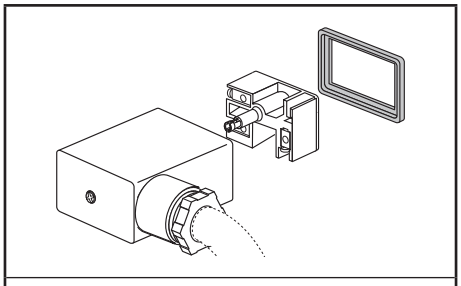

rotatable connector size 22

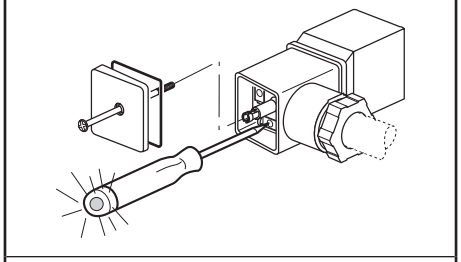

standard rotatable connector size 30 with power supply control

VDR Varistor absorbing the self-inductance of the coil.
RC RC circuit absorbing the self-inductance of the coil.
LED Green light-emitting diode, bidirectional, signalling the presence of voltage across the coil terminals.

SPECIFICATIONS

description	cable length	cable O.D.		wire cross-section	max. voltage	type	catalogue number		
		size 22	size 30	(mm^2)	(V)		size 22 NBR	size 30 NBR	size 30 VMQ [1]
Rotatable connector									
standard, without LED indicator	-	6-8 mm	6-10 mm	1,5	250	01-02	**88122404**	**88122602**	**88122625**
with integrated LED indicator and electrical protection	-	6-8 mm	8-10 mm	1,5	12	01-02	-	**88122611**	-
					24		**88122405**	**88122603**	-
					48		**88122406**	**88122604**	-
					115		**88122407**	**88122605**	-
					230		**88122410**	**88122608**	-
Non-rotatable connector with cable									
without LED indicator	2 m	-		1,5	250	03-04	**88122413**	**88122612**	-

[1] For use within class H temperature limits.

00142GB-2016/R02
Availability, design and specifications are subject to change without notice. All rights reserved.

INSTALLATION

- The connectors can be mounted in any position without affecting operation

ORDERING EXAMPLES:

88122404
88122602
basic number

DIMENSIONS (mm), WEIGHT (kg)



TYPE 01

Size 22 (11 mm)
EN 175301-803 industry standard form B
IP65

88122404

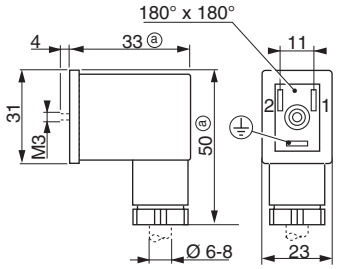

88122405/406/407/410

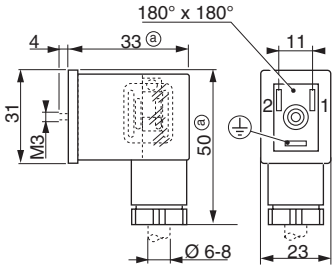

88122404/405/406/407/410

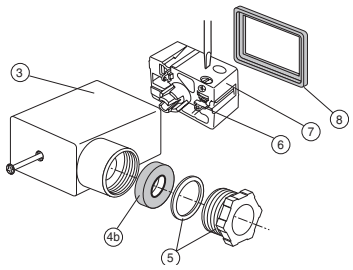

(a) Max. dimension.



TYPE 02

Size 30 (18 mm)
ISO 4400 / EN 175301-803, form A
IP65

88122602/625

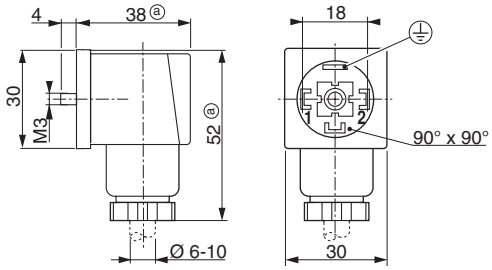

88122611/603/604/605/608

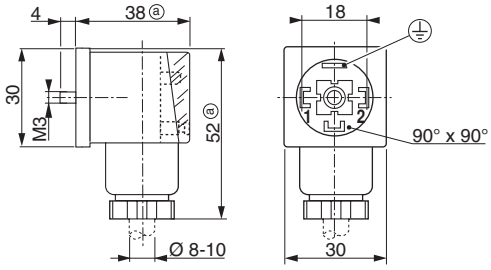

88122602/625

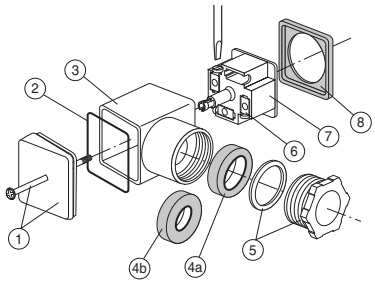

(a) Max. dimension.



TYPE 03

Size 22, flying leads (11 mm)
EN 175301-803 industry standard form B
IP65
(non-rotatable terminal holder)

88122413

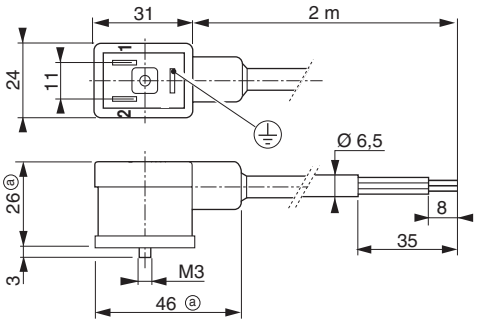



TYPE 04

Size 30, flying leads (18 mm)
ISO 4400 / EN 175301-803, form A
IP65
(non-rotatable terminal holder)

88122612

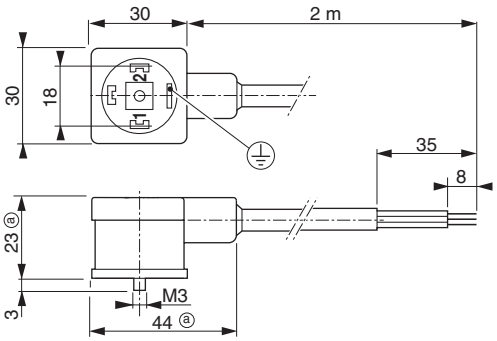

(a) Max. dimension.

type	L (m)	weight (1) without LED indicator	weight (1) with LED indicator
01	-	0,025	0,025
02	-	0,030	0,032
03	2	0,150	-
04	2	0,155	-

(1) Including seals and screws.

sizes 03 and 04	
brown wire	terminal 1 (+)
blue wire	terminal 2 (-)
green/yellow wire	earth

1. Fastening screw / cover
2. Cover seal
3. Enclosure
4. **88122602/625:**
   2 seals
   for cable dia. 8 to 10 mm (4a)
   or cable dia. 6 to 8 mm (4b)
   88122611/603/604/605/608:
   1 seal for cable dia. 8 to 10 mm (4a)
   88122404/405/406/407/410:
   1 seal for cable dia. 6 to 8 mm (4b)
5. Stuffing box washer and nut
6. Cable connection terminal
7. Terminal holder
8. Connector seal

00142GB-2016/R02
Availability, design and specifications are subject to change without notice. All rights reserved.

CONNECTORS

EN 175301-803, industry standard form C (9,4 mm)
EN 175301-803, form C (8 mm)
size 15

Series **881**

FEATURES

- *Spade connector size 15 to fit standardised three-pin moulded coils:*
  - EN 175301-803, industry standard form C (9,4 mm), for coil type CM15 (series 202), DMX and series 302, 630, 519, 520, 521 and 578 (MEGA)
  - EN 175301-803, form C (8 mm), for series 302, 630 and 202
- *The connectors are available in three versions: standard rotatable version, or version with non-rotatable 3-core moulded-in cable, 2 m or 5 m long, with or without integrated visual LED indicator and electrical protection*



GENERAL

Connector specification	
size 15, 9,4 mm pin spacing	EN 175301-803, industry standard form C
size 15, 8 mm pin spacing	EN 175301-803, form C
Max. operating temperature	-25°C to +60°C [version with moulded-in cable -25°C to +60°C]

CONSTRUCTION

Standard version	PA (polyamide), glass-fibre reinforced
Enclosure with LED and protection	PA or PP
Enclosure with PVC cable	PP (polypropylene), glass-fibre reinforced
Seals	NBR

ELECTRICAL CHARACTERISTICS

	Size 15	**Size 15**
Number of contacts	2 + common earth (1)	2 + common earth
Distance between contacts	**9,4 mm**	**8 mm**
Contact resistance	≤ 4 m Ω	≤ 4 m Ω
Connector	Spade plug	Spade plug
Electrical safety	IEC 335	IEC 335
Electrical enclosure protection	IP65 (EN 60529)	IP65 (EN 60529)
Number of wires (with cable)	3	3

LED indicator and electrical protection diagrams

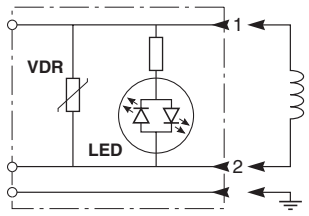

connector

VDR Varistor absorbing the self-inductance of the coil.
LED Green light-emitting diode, bidirectional, signalling the presence of voltage across the coil terminals.

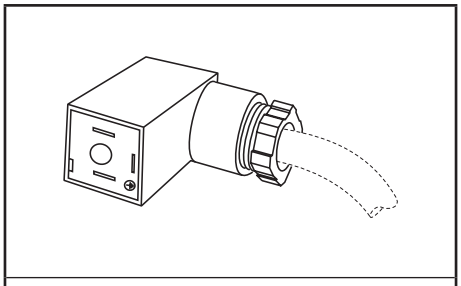

rotatable connector 9,4 mm or 8 mm

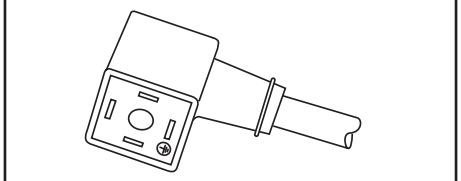

non-rotatable connector with cable

SPECIFICATIONS

description	cable length	cable O.D.	wire cross-section (mm²)	max. voltage (V)	type	catalogue number size 15 9,4 mm	catalogue number size 15 8 mm
Rotatable connector							
standard, without LED indicator	-	4-6 mm	0,6	250 V	01-02	**88143581**	**88130211**
Non-rotatable connector with cable							
without LED indicator	2 m	-	0,6	250 V	03	**88143567**	(2)
with integrated LED indicator and electrical protection	2 m	-	0,6	24 V	04	**88143580**	-
	5 m					**88143593**	-

(1) Version with 3 pins + earth, see our catalogue Fluid Automation Pneumatic Components, page P575.
(2) Contact us

00142GB-2016/R02
Availability, design and specifications are subject to change without notice. All rights reserved.

OPTIONS

- Connectors with cable, 5 m long, contact us

INSTALLATION

- The connectors can be mounted in any position without affecting operation

ORDERING EXAMPLES:

88143581
88130211
basic number

DIMENSIONS (mm), WEIGHT (kg)



TYPE 01

Size 15, 9,4 mm
EN 175301-803, industry standard form C
IP65

88143581

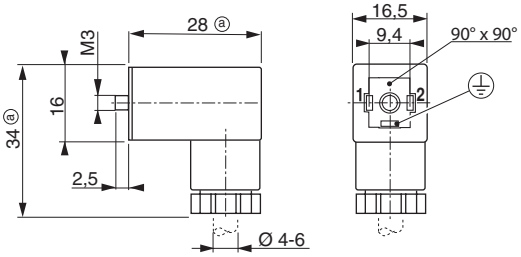

ⓐ Max. dimension.



TYPE 02

Size 15, 8 mm
EN 175301-803, form C
IP65

88130211

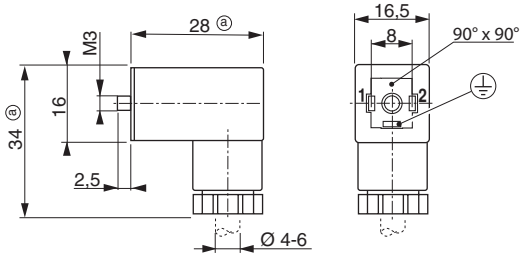



TYPE 03

Size 15, flying leads, without LED indicator
EN 175301-803, industry standard form C (9,4 mm)
IP65
(non-rotatable terminal holder)

88143567

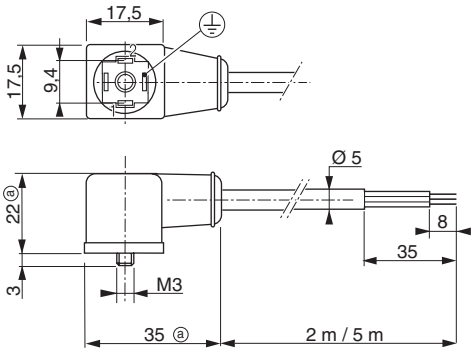

ⓐ Max. dimension.



TYPE 04

Size 15, flying leads, with LED indicator
EN 175301-803, industry standard form C (9,4 mm)
IP65
(non-rotatable terminal holder)

88143580/593

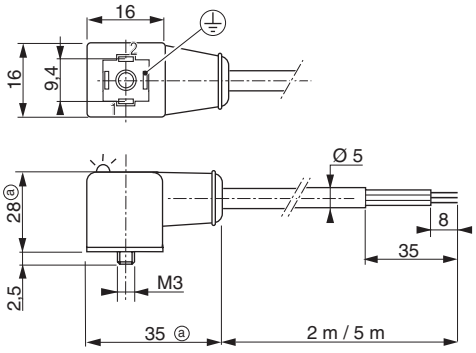

ⓐ Max. dimension.

88130211 - 88143581

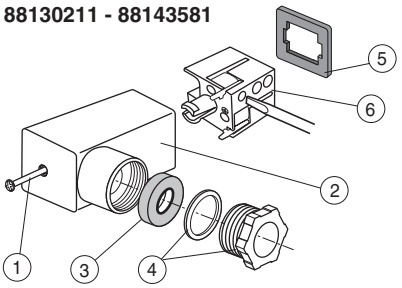

1. Fastening screw
2. Enclosure
3. Seal for cable dia. 4 to 6 mm
4. Stuffing box washer and nut
5. Connector seal
6. Terminal holder
7. Cable connection terminal

type	L (m)	weight (1) without LED indicator	weight (1) with LED indicator
01 - 02	-	0,015	-
03	2	0,100	-
04	2	-	0,100
	5	-	0,220

(1) Including seals and screws.

sizes 03 and 04	
brown wire	terminal 1 (+)
blue wire	terminal 2 (-)
green/yellow wire	earth

00142GB-2016/R02
Availability, design and specifications are subject to change without notice. All rights reserved.