OY5110

Measuring light grid

OYA1640-165-0-10-C-3-IO

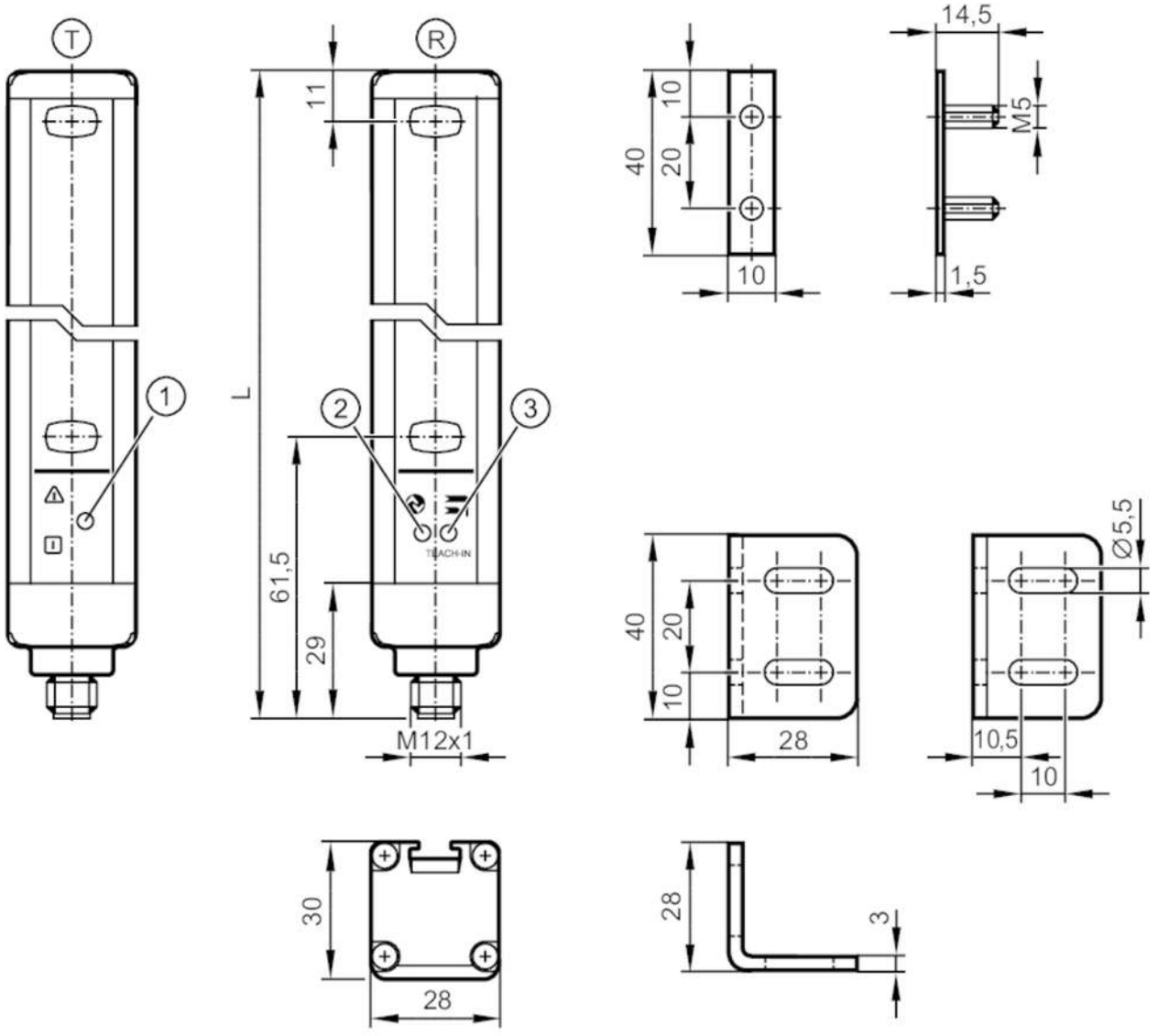

transmitter
1 LED green
2 LED red
receiver
3 LED green
4 LED yellow
5 LED red

CE

Product characteristics	
Type of light	infrared light
Electrical design	PNP/NPN; (parameterisable)
Protection	IP 65; IP 67

Electrical data		
Operating voltage	[V]	19.2...28.8 DC
Protection class		III
Reverse polarity protection		yes

OY5110

Measuring light grid

OYA1640-165-0-10-C-3-IO

Max. power-on delay time	[ms]	300
Type of light		infrared light
Wave length	[nm]	880
Receiver		
Current consumption	[mA]	100
Transmitter		
Current consumption	[mA]	15
Inputs / outputs		
Number of inputs and outputs		Number of digital outputs: 1
Outputs		
Electrical design		PNP/NPN; (parameterisable)
Number of digital outputs		1
Output function		normally open / normally closed; (parameterisable)
Max. voltage drop switching output DC	[V]	2
Max. current load per output	[mA]	100
Switching frequency DC	[Hz]	12
Short-circuit protection		yes
Overload protection		yes
Detection zone		
Number of beams		165
Sensing field height	[mm]	1640
Sensing field width (low light intensity)	[m]	0...2
Sensing field width (high light intensity)	[m]	1...10
Distance between beams	[mm]	10
Software / programming		
Parameter setting options		hysteresis / window; second switch point; Switch-on and switch-off delay; switch-on operations; Teach function; light-on/dark-on mode
Interfaces		
Communication interface		IO-Link
Transmission type		COM2 (38,4 kBaud)
IO-Link revision		1.1
SDCI standard		IEC 61131-9
Profiles		Smart Sensor: Device Identification; Multi-channel, two setpoint switching sensor, type 0 Generic Profiled Sensor; Process Data Variable; Device Diagnosis; Teach Channel
SIO mode		yes
Required master port type		A
Min. process cycle time	[ms]	10
IO-Link process data (cyclical)		**function** / **bit length**
		process value / 80
		device status / 4
		binary switching information / 2
IO-Link functions (acyclical)		application specific tag; operating hours counter

OY5110

Measuring light grid

OYA1640-165-0-10-C-3-IO

Supported DeviceIDs		**Type of operation**	**DeviceID**
		default	1402
Note		For further information please see the IODD PDF file under "Downloads"	
Operating conditions			
Ambient temperature	[°C]	-10...55	
Storage temperature	[°C]	-25...70	
Protection		IP 65; IP 67	
Max. immunity to extraneous light	[klx]	10	
Tests / approvals			
EMC		EN 61000-4-2 ESD	4 kV CD / 8 kV AD
		EN 61000-4-3 HF radiated	3 V/m
		EN 61000-4-4 Burst	2 kV
		EN 61000-4-6 HF conducted	3 V
		EN 55011	Class A
Vibration resistance		EN 60068-2-6 Fc	(10-55) Hz 1 mm amplitude, oscillation period 5 min., 30 min. per axis at resonance or 55 Hz
Shock resistance		EN 60068-2-27 Ea	30 g 11 ms half-sine; 3 shocks each in every direction of the 3 coordinate axes
MTTF	[years]	59	
Mechanical data			
Weight	[g]	5	
Housing		rectangular	
Dimensions	[mm]	1713 x 30 x 28	
Materials		housing: aluminium; front pane: PC	
Length L	[mm]	1713	
Displays / operating elements			
Display		transmitter	2 LED
		receiver	3 LED
Accessories			
Items supplied		mounting bracket: 3	
		slot nuts: 3	
		Nuts	
Remarks			
Pack quantity		1 pcs.	

Electrical connection - receiver

Connector: 1 x M12; coding: A

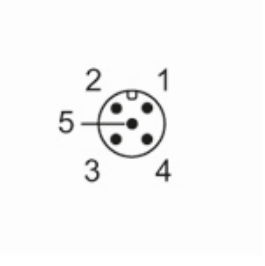

OY5110

Measuring light grid

OYA1640-165-0-10-C-3-IO

Connection

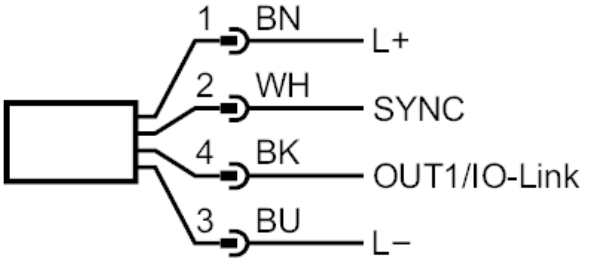

Electrical connection - transmitter

Connector: 1 x M12; coding: A

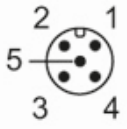

Connection

