Brand of NTN corporation

Technical data

UKT212H

Bearing units



Grey cast housing, radial insert ball bearing with adapter sleeve,seal with slinger

KIT CONTENT

UK212G2H, T212

VISUAL (S)

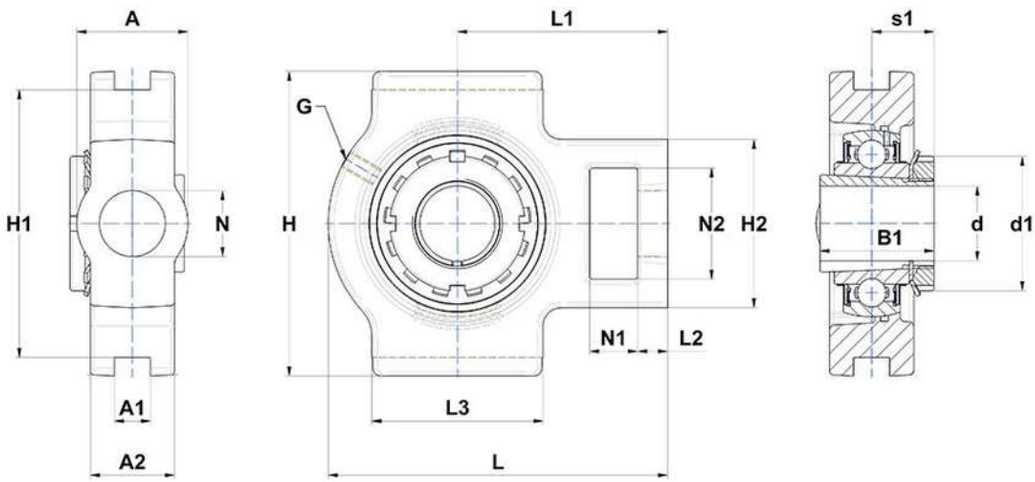

PRODUCT DEFINITION

Brand	SNR
A - Housing width	64 mm
A1 - Width of location slot	22 mm
A2	42 mm
B1 - Overall width Inner Ring	62 mm
d - Shaft diameter	55 mm

PRODUCT DEFINITION	
d1 - Outer dia of eccent. Lock. collar / nut of adapter sleeve	80 mm
G - Grease fitting	M6x1
H - Housing length, width or diameter	146 mm
H1 - Distance between location slots	130 mm
H2 - Housing height / width	102 mm
L - Housing length	194 mm
L1 - Distance attachment end face to bearing centerline	119 mm
L2 - Thickness of attachment end	19 mm
L3 - Length of guidance slot/face	102 mm
N - Mounting hole dimension	35 mm
N1 - Length of attachment slot	32 mm
N2 - Height of attachment slot	64 mm
s1 - Distance nut to middle of bearing raceway	31 mm

PRODUCT PERFORMANCE	
C - Dynamic load rating	52500000 mN
C0 - Static load rating	32800000 mN
Operating temperature min.	253,15 °K
Operating temperature max.	373,15 °K

OTHER FEATURES	
Mass	4,71 kg
Adapter sleeve designation	H2312