ISSUE DATE: 07/01/2014

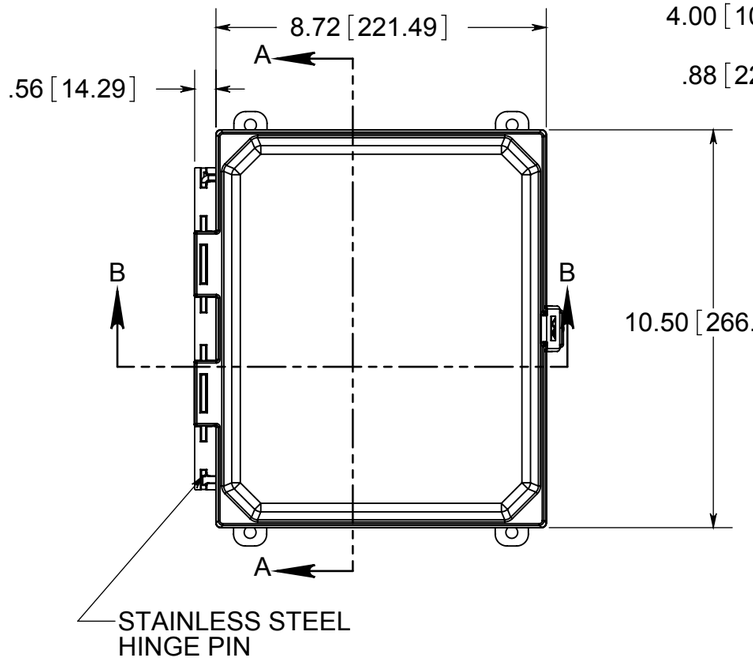

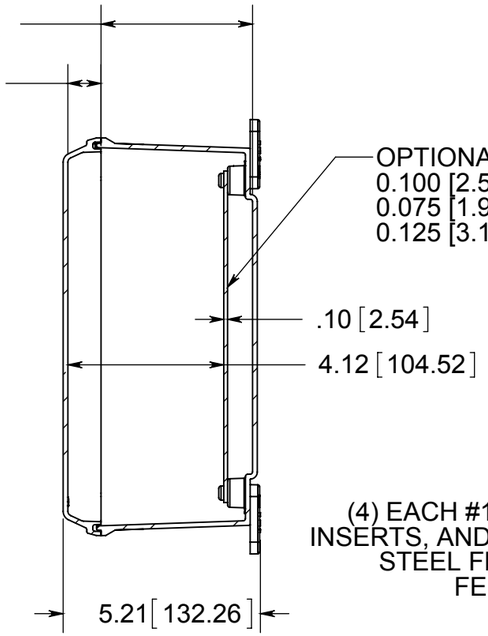

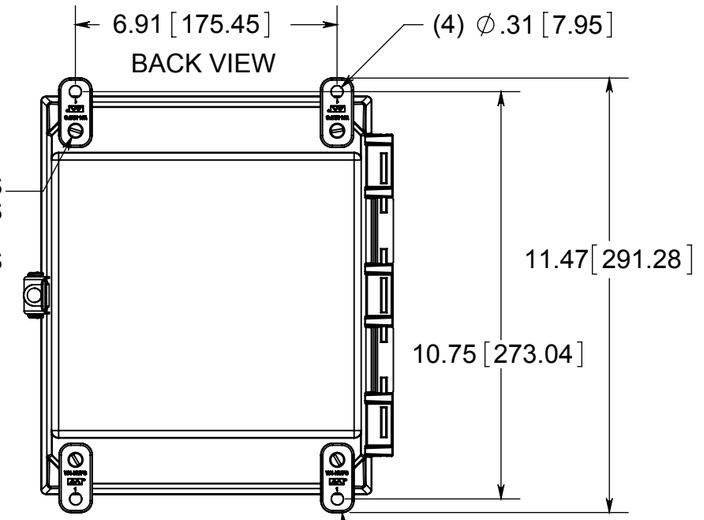

FRONT VIEW
WITH COVER REMOVED
AND BACK PANEL DISPLAYED

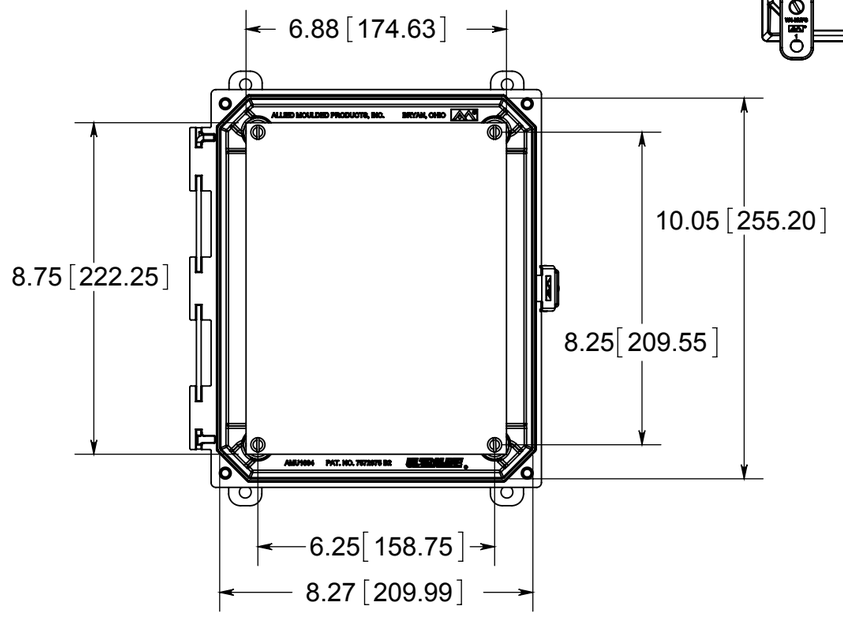

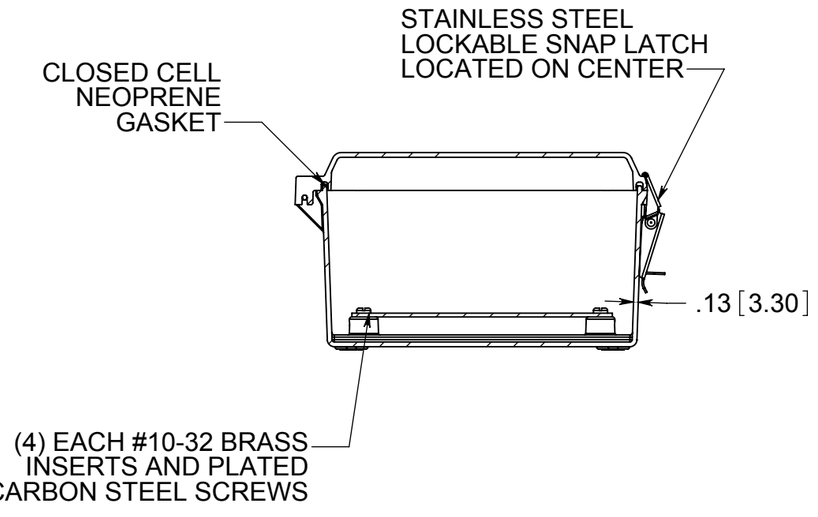

MATERIAL:
BOX-COMPRESSION MOLDED FIBERGLASS REINFORCED POLYESTER
COVER- COMPRESSION MOLDED FIBERGLASS REINFORCED POLYESTER
CLEAR COVER AND WINDOWS- POLYCARBONATE

PART No. PJU1084L

for more information visit
www.hammfg.com
Data subject to change without notice

Drawing Not to Scale