PRODUCT DATASHEET

M SERIES



ELECTRIC**MOTOR**

DATE 20.05.2022

CUSTOMER RS COMPONENTS

MOTOVARIO®
HEART OF MOTION
a TECO Group company

CONFIGURATION

PRODUCT DATASHEET

CHARACTERISTIC	VALUE
Supplier	Motovario
Regulations	CE
Motor	Three-Phase
Size	080
Series	Premium Efficiency-Self Power
Poles	4
Electrical Execution	Std (Voltage Tolerance +/- 10%)
Service	S1
Voltage	230/400-265/460 V
Frequency	50-60 Hz
Power	0,75 kW
Cooling	Self-Ventilated
Mounting Arrangements	B5
Flange Dim.	Ø200
Shaft Dim. (DE)	Ø19x40
Rear Shaft End (NDE)	No
Insulation Rating	F
Protection Rating	IP55
Thermal Protectors	No
Ambient Conditions	Standard
Heaters	No
Condensation Drainage	No
Devices	No
Accessories	None
Terminal Box Cover	Aluminium
Fan	Plastic
Fan Cover	Standard
MO-Notes	No

DRAWINGS

Values expressed in [mm]

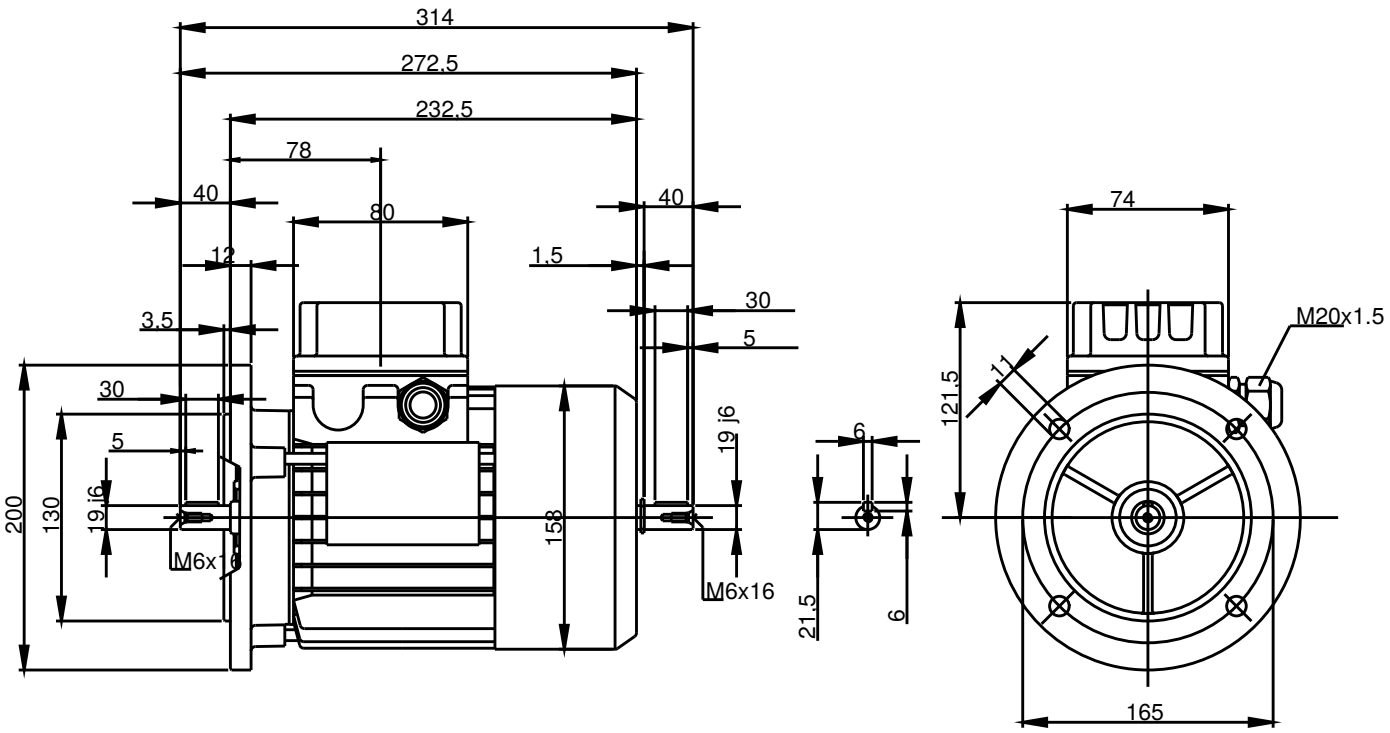

PERFORMANCES

PRODUCT DATASHEET

400V 50Hz

P_n [kW]			n_n [rpm]	I_n [A]	M_n [Nm]	η_n% (4/4) limit	η_n% (4/4)	η_n% (3/4)	η_n% (2/4)	$\cos\varphi_n$	$\frac{M_s}{M_n}$	$\frac{I_s}{I_n}$	$\frac{M_{max}}{M_n}$	$\frac{M_{po}}{M_n}$	$\frac{J_{Lmax}}{J_T \text{ at Mn}}$ 1)	$\frac{J_{Lmax}}{J_T \text{ at Mn}}$ 2)	J_T at Mn 1) [10^{-4} ×Kgm^2]	J_T at Mn 2) [10^{-4} ×Kgm^2]	W_T 1) [Kg]	W_T 2) [Kg]	Z_0 [10^3×1/h]	M_B [Nm]
0,75	IE3	80B4	1500	1,86	4,8	82,5	83,0	82,5	80,5	0,70	2,6	5,4	2,7	1,8	4,5	4,3	30,7	32,3	11,2	14,7	7,1	15
1,1	IE3	90S4	1500	2,67	7,0	84,1	85,0	84,5	82,3	0,70	2,7	5,6	2,7	1,9	5,0	4,5	32,3	35,8	14,1	17,6	5,0	13
1,5	IE3	90L4	1500	3,6	9,5	85,3	85,5	85,3	83,2	0,70	3,1	5,6	2,7	1,9	6,0	5,5	37,5	41,0	15,9	21,5	4,0	26
2,2	IE3	90LM4	1500	5,2	14,0	86,7	86,7	86,2	83,7	0,70	3,0	6,1	2,9	2,0	5,0	4,6	47,0	50,5	19,3	24,9	3,2	40

400V 60Hz

P_n [kW]			n_n [rpm]	I_n [A]	M_n [Nm]	η_n% (4/4) limit	η_n% (4/4)	η_n% (3/4)	η_n% (2/4)	$\cos\varphi_n$	$\frac{M_s}{M_n}$	$\frac{I_s}{I_n}$	$\frac{M_{max}}{M_n}$	$\frac{M_{po}}{M_n}$	$\frac{J_{Lmax}}{J_T \text{ at Mn}}$ 1)	$\frac{J_{Lmax}}{J_T \text{ at Mn}}$ 2)	J_T at Mn 1) [10^{-4} ×Kgm^2]	J_T at Mn 2) [10^{-4} ×Kgm^2]	W_T 1) [Kg]	W_T 2) [Kg]	Z_0 [10^3×1/h]	M_B [Nm]
0,75	IE3	80B4	1800	1,62	4,0	83,5	85,5	84,1	81,0	0,68	3,1	6,6	3,2	2,1	4,5	4,3	30,7	32,3	11,2	14,7	7,1	15
1,1	IE3	90S4	1800	2,35	5,8	86,5	86,5	85,6	82,7	0,68	3,2	6,7	3,0	2,3	5,0	4,5	32,3	35,8	14,1	17,6	5,0	13
1,5	IE3	90L4	1800	3,2	8,0	86,5	86,5	85,7	83,5	0,68	3,7	6,8	3,4	2,2	6,0	5,5	37,5	41,0	15,9	21,5	4,0	26
2,2	IE3	90LM4	1800	4,5	11,7	89,5	89,5	87,5	85,3	0,68	3,4	7,5	3,7	2,3	5,0	4,6	47,0	50,5	19,3	24,9	3,2	40

MOUNTING POSITIONS

Mounting position: specific construction in relation to the mounting equipment, type of bearings and shaft end.
Installation type: positioning of the motor in relation to the axis line (horizontal or vertical) and mounting equipment.
The table lists the most common installation methods in relation to the mounting position.
With reference to standard IEC 60034-7, the electric motor's nameplate must be marked with the mounting position (IMB3, IMB5, IMB14, IMB34, IMB35) independently of the installation type.

IMB3	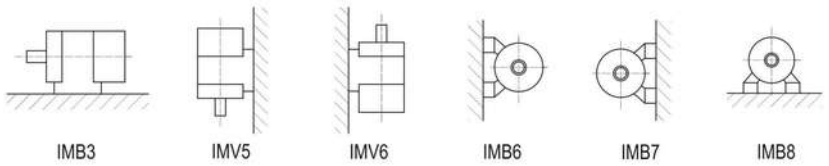
IMB5	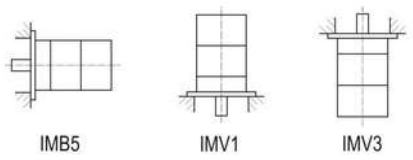
IMB14	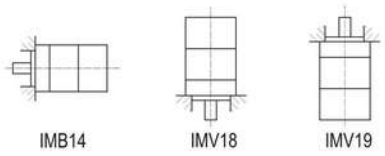
IMB35	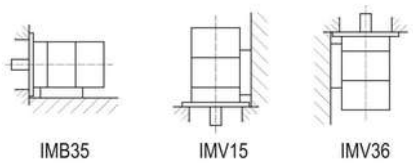
IMB34	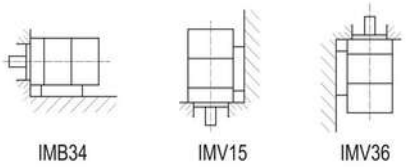

Mounting position:

- IMB3 with feet
- IMB5 with drive side flange, through holes
- IMB14 with drive side flange, threaded holes
- IMB35 with feet and drive side flange, through holes
- IMB34 with feet and drive side flange, threaded holes

Besides being available in the above-indicated standardised mounting positions, motors are available also in compact versions; this applies to both aluminium CHA and CBA gear reducers (B10 mounting position) and to cast iron CH, CB and CS gear reducers (B11 mounting position). These mounting positions require special flanges integral with the gear reducer and cable output shaft where pinion is fitted before the reduction stage. The resulting gearmotor has reduced axial size. For further details, including dimensional drawings, refer to the specific catalogues of the gear reducers.