

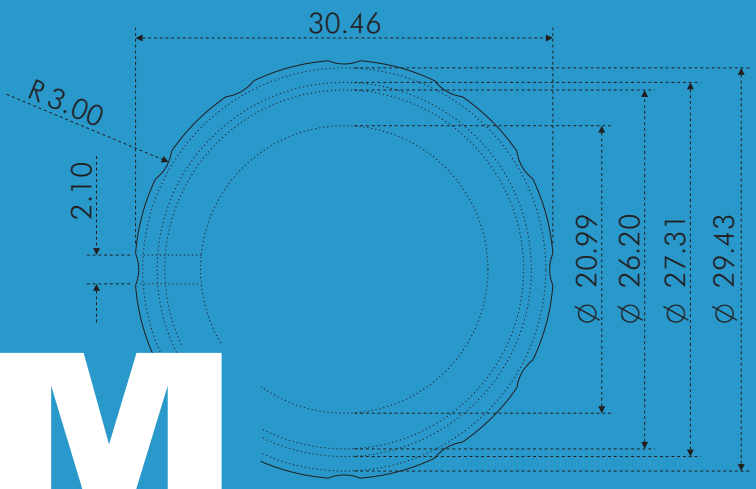

APEM

9000 SERIES - CONTACTLESS JOYSTICKS

ULTRA LOW PROFILE ONE, TWO, THREE AXIS WIDE VARIETY OF HANDLES

HIGH EMC IMMUNITY 18 MONTH WARRANTY INFINITE RESOLUTION

CONTACTLESS SENSING CONSISTENT PERFORMANCE IP65 ABOVE PANEL

OPTIONAL 'AT CENTRE' AND 'INTERNAL FAULT' DETECTION LONG SERVICE LIFE



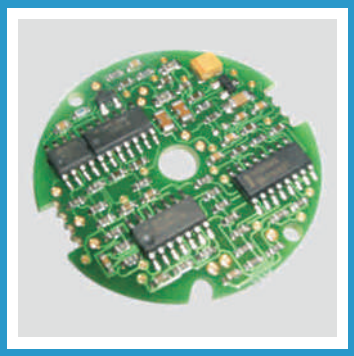



9000 SERIES - CONTACTLESS JOYSTICKS

PRODUCT DESCRIPTION

GENERAL DESCRIPTION

The 9000 Series is ideal for those applications that demand proportional control with the lowest possible profile below the panel. Developed from the proven 7000 Series, the 9000 Series employs the same, highly proven, contactless, inductive sensing and circuitry. The mechanics have been radically improved to reduce the below-panel depth to a world class 35mm sub-panel or 31mm drop-through. This joystick offers self-centering, omni-directional functionality, and utilises the exclusive 'locking cam' system to rigidly secure the highly repeatable mechanism around the precision ground steel operating shaft. High precision air wound coils are mounted directly onto the SMT circuitry, delivering enviable accuracy whilst further minimising the installed depth of the joystick.

CIRCUITRY

The 9000 Series joystick operates by passing a oscillating current through a drive coil, directly mounted at the lower end of the operating lever, and immediately above the four sensing coils. When the shaft and drive coil moves away from the centre, the signals detected in each opposing pair of coils increase nominally in proportion to deflection. The phase of those signals determine the direction. Synchronous electronic switches followed by integrating amplifiers provide DC signals directly equivalent to those of potentiometer joysticks, but with fixed output impedance and free of wiper noise and track wear.

DUAL DECODE

Designed for use in the most safety-critical applications, the 9000 Series incorporates comprehensive internal monitoring circuitry whereby output signals are continually compared with separately generated 'mirror signals'. In the unlikely event of an internal fault, the dual decode system will generate a separate fault signal, enabling the controller to fail-to-safe. The dual decode system is a complete internal self-monitoring system, providing a far higher standard of protection. An additional,'away from centre' signal is also available whenever required. Although the monitoring of the joystick is fully internal, the inverse 'mirror signals' can be available as external outputs where the monitor function is incorporated within the controller circuitry.

GUIDED FEEL

The 9000 Series may also be specified with guided feel. A joystick with guided feel moves more readily towards the poles (N, S, E and W) and whilst it can still move away from the poles, the force required to do so is greater. Unless specified otherwise, joysticks are supplied as standard without guiding. This standard configuration allows the user to move the joystick anywhere within the limiter with the same force and without any bias.

FUNCTIONAL OPTIONS

The 9000 Series can be configured in three different modes -

Orthoganol, standard signals - Replicating that of a potentiometer

Deliberate signal mixing - Ideal for those applications whereby the method of steering is by controlling two motors. For example one motor uses X+Y signals and the other uses X-Y signals. This mixing is achieved by internally orientating the signals at 45 degrees to normal. Typical applications may be twin propeller boats, tracked vehicles, or wheelchairs.

Deliberate signal interaction - Enables reduction in one signal as the other increases. This option is particularly beneficial where it is undesirable to maintain full forward speed while turning and vice versa.

Note: The company reserves the right to change specifications without notice.

STANDARD OPTIONS

The 9000 Series is available with a range of standard options, to specify your joystick, simply choose one option from each column. An example is shown below.

9	S	A	20	R	C	6	2	00
SERIES	SENSING	DECODING	GAIN	LIMITER	HANDLE	BEZEL	GAITER	MODIFIER
9000 (9)	Mixed (M)	Single Decode (A)	20% (+/- 10%) (10)	Single Axis (A)	Round (C)	Not supplied (0)	Gloss Finish (2)	None (00)
	Interacting (Q)	Dual Decode Dual Outputs (M)	40% (+/- 20%) (20)	Cross (C)	Cylindrical (D)	Circular (4)	Standard (5)	Guided Feel (20)
	Standard (S)	Dual Decode Separate Fault & Centre Detect (W)	66% (+/- 33%) (33)	Diamond (D)	Conical (E)	Square (6)		
		Dual Decode Fault Detect (X)	80% (+/- 40%) (40)	Round (R)	Conical (G)			
		Dual Decode Combined Fault & Centre Detect (Y)	100% (+/- 50%) (50)	Square (S)	Push Button Tactile (J)			
		Dual Decode Centre Detect (Z)		X Type (X)	Push Button Tactile (M)			
					Push Button Soft Touch (N)			
					Third Axis + Push Button (P)			
					Skirted (Q)			
					Third Axis (R)			
					Third Axis - Knurled (Y)			

BEZEL OPTIONS

For drop in mounting, please specify bezel option 6. For sub-panel mounting, no bezel is necessary, unless the gaiter is required to seal to the face of the panel in which case bezel option 4 should be specified.

SPRINGING

As standard 9000 Series are offered sprung to centre. The standard spring force requires 1.3N (nominally) to off-centre the joystick. The 9000 Series may be specified with a lighter spring (1N), or a stronger spring (1.6N)

Note: Forces quoted are subject to exact joystick configuration and are provided as a guide only. Owing to the size and weight of handle type P it is supplied as standard with a strong spring.

DUAL DECODE INTERFACE

For optimum performance of the centre detect and fault detect signals, Apem recommend the signals are “pulled high” via an input resistor of typically 22k, on the controller circuitry.

CENTRE TAP REFERENCE

All 9000 Series output a centre tap reference as standard. This reference is set within the joystick at 50% of Vcc (+/-1%). For optimum accuracy the wipers should be read relative to the centre tap.

NON STANDARD

Further non standard options including custom handles or special limiters are available. Please refer to Apem for further details.

TECHNICAL SPECIFICATION

All parameters and dimensions shown maybe subject to specification, please refer to Apem for details.

Life Cycles	: >10 Million Operations	Supply Voltage	: 4.75V Min to 15V Max
Signal Swing	: +/-10% of Vcc to +/-50% of Vcc	Output Signal Tolerance	: +/-10% of Output
Output at Centre	: +/-1%	Output Impedance	: 1.8K +/-1%
Signal Ripple	: <1% of Output	Supply Current	: Typically 10mA
ESD Immunity	: >12kV - Correctly Installed	RFI Rejection	: >20V/m - Bare Joystick
RFI Rejection	: >40v/m - Correctly Installed	Preferred Load	: >10K
Body Material	: Glass Reinforced ABS	Shaft Material	: Stainless Steel
Shaft Diameter	: 5mm	Other Materials	: Brass, Acetal, Nylon
Gimbal Pivot	: Acetal and Hardened Steel	Gaiter	: Neoprene
Weight	: 90 Grams	Above Panel Seal	: IP65
Temperature Range	: -20°C to +55°C	Max Load to Shaft - Horizontal	: 25Kg (Momentary)
Max Load to Shaft - Vertical	: 75Kg (Momentary)	Operating Lever Deflection	: +/-18°

NEAR EQUIVALENT CIRCUIT

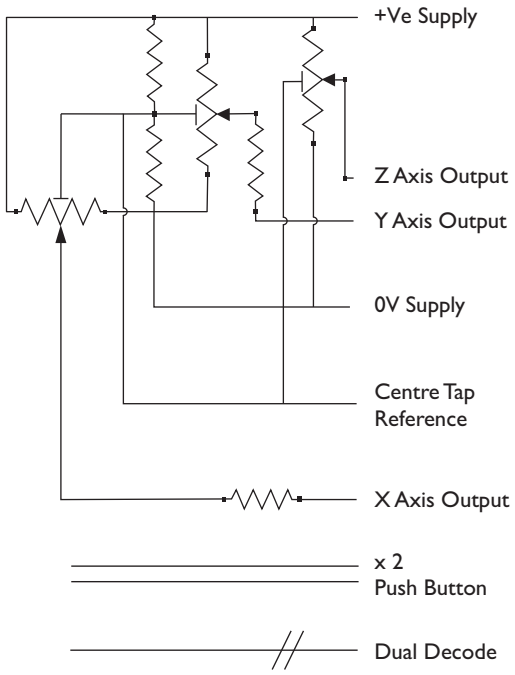

CABLE SPECIFICATION

Cable information may be subject to specification, please refer to Apem for details.

14/0.12 - Fourteen strands of 0.12mm diameter tinned annealed copper wire PVC insulated to a nominal OD of 1mm.			
Red	: +Vcc	Black	: 0V
Blue	: X Axis Wiper	Yellow	: Y Axis Wiper
Green	: Centre Tap Reference	Purple	: Z Axis Wiper
Orange	: Centre Detect, or Combined Fault & Centre Detect	White	: Fault Detect
Brown	: Mirror of X Axis Wiper	Grey	: Mirror of Y Axis
7/0.127 - Seven strands of 0.127mm diameter tinned copper wire ETFE insulated, to a nominal OD of 0.7mm			
Orange	: Push Button		
All 9000 Series are supplied with 150mm of twisted cable harness, with tinned ends.			
Connectors may be fitted upon request.			

GENERAL DIMENSIONS

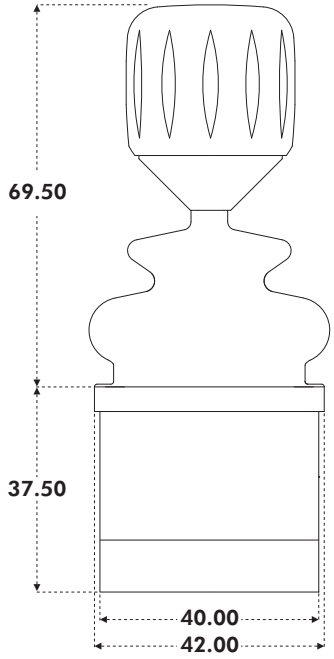

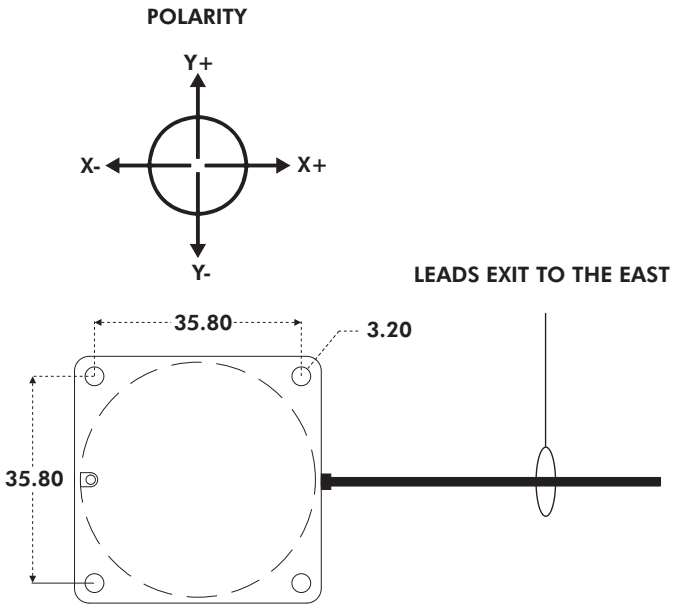

DROP IN MOUNTING - PANEL CUT-OUT & MOUNTING INSTALLATION

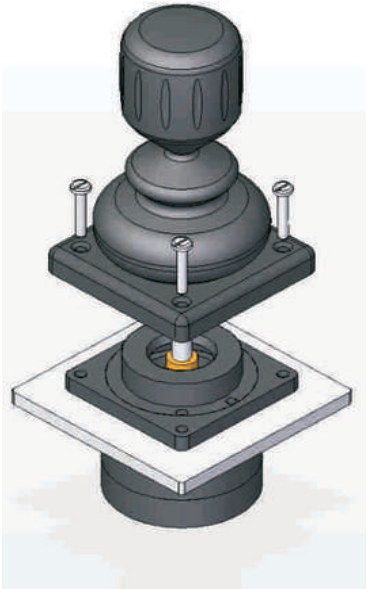

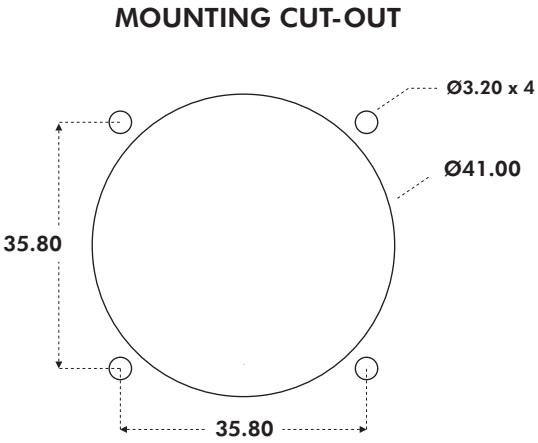

The joystick is dropped into the panel cut-out. For panel thickness of <3mm, M3 x 16 countersunk machine screws are recommended.

Note: The dimensions shown are for a generic 9000 Series with the third axis R type handle. For specific dimensions of this or any other configuration please refer to Apem.

MOUNTING OPTION A - PANEL CUT-OUT & MOUNTING INSTALLATION

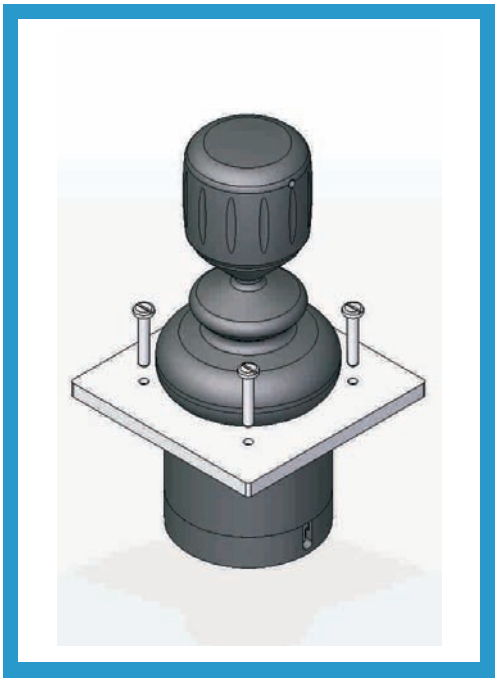

MOUNTING CUT-OUT

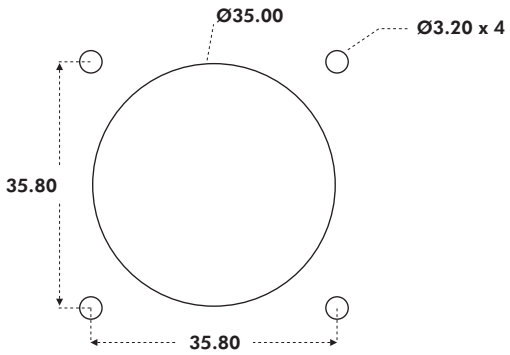

When mounted this way the panel acts as the bezel and no separate bezel is needed. M3 machine screws are recommended.

MOUNTING OPTION B - PANEL CUT-OUT & MOUNTING INSTALLATION

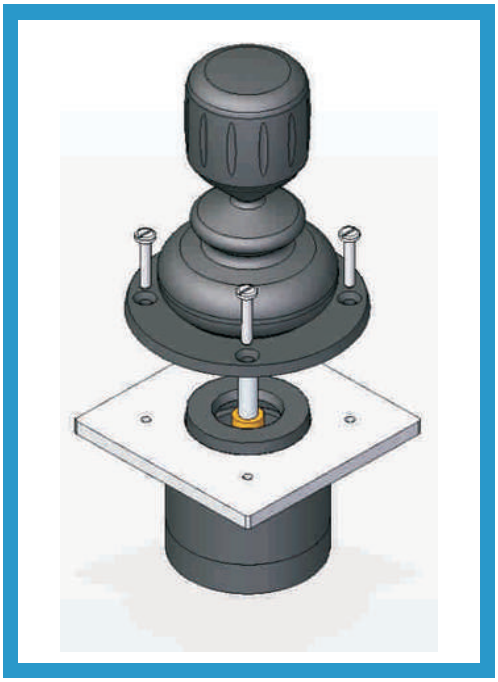

MOUNTING CUT-OUT

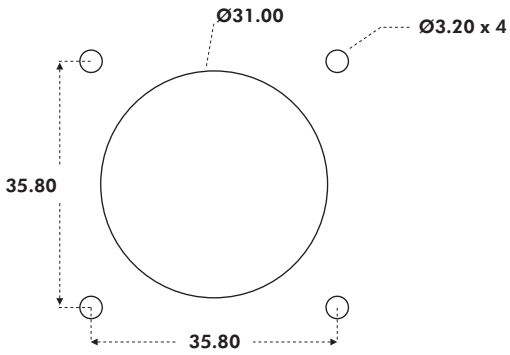

The joystick flange is mounted beneath the panel and the base of the gaiter must be brought through the panel cut-out and held in place with the circular bezel. For panel thicknesses of 3mm, M3 x 16 countersunk machine screws are recommended.

Note: When sub panel mounting, great care should be taken not to damage the gaiter, or any of the mechanism under the gaiter. All panel cut-outs should be free from sharp edges and swarf that may damage the gaiter.

HANDLE SELECTION GUIDE

HANDLE C



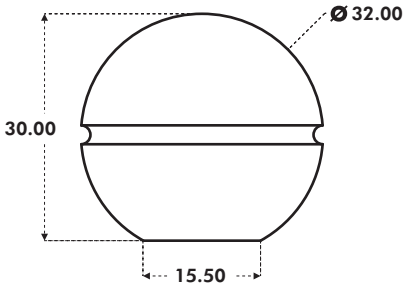

The conventional choice for power chairs.

MATERIAL: Phenolic

FINISH: Gloss

STANDARD COLOUR: Black

OTHER COLOURS: Upon request

AVAILABLE: 1000, 4000 and 9000 Series

HANDLE D



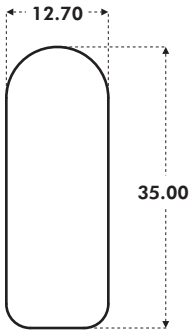

A tall cylindrical handle, with an anodised aluminium finish.

MATERIAL: Aluminium

FINISH: Anodised

STANDARD COLOUR: Black

OTHER COLOURS: Not available

AVAILABLE: 1000, 4000 and 9000 Series

HANDLE E



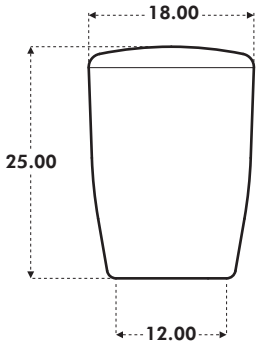

A mid-size conical handle with a modern look and feel.

MATERIAL: Nylon

FINISH: Matt

STANDARD COLOUR: Black

OTHER COLOURS: Upon request

AVAILABLE: 4000 and 9000 Series

HANDLE F



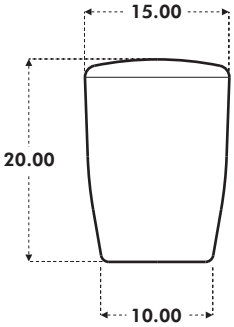

The smallest conical handle for that feel of precision.

MATERIAL: Nylon

FINISH: Matt

STANDARD COLOUR: Black

OTHER COLOURS: Upon request

AVAILABLE: 1000 and 5000 Series

Note: The drawings above are not to scale and all dimensions shown are in millimeters.
Note: Different colour variants may be subject to minimum order quantities.

HANDLE SELECTION GUIDE

HANDLE G



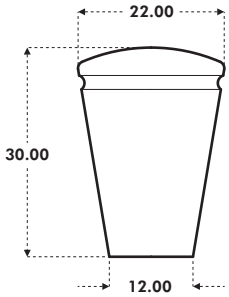

A larger conical handle with a gloss finish.

MATERIAL: Phenolic

FINISH: Gloss

STANDARD COLOUR: Black

OTHER COLOURS: Not available

AVAILABLE: 4000 and 9000 Series

HANDLE H



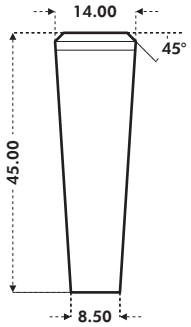

The tallest conical handle with a premium look.

MATERIAL: Aluminium

FINISH: Anodised

STANDARD COLOUR: Silver

OTHER COLOURS: Upon request

AVAILABLE: 1000 and 5000 Series

HANDLE J



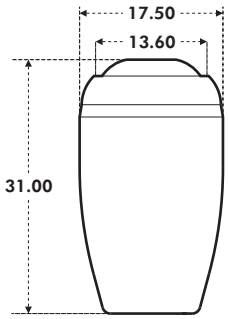

A tactile push button handle using the Apem IP67 sealed, momentary IS Series push button.

MATERIAL: ABS

FINISH: Matt

STANDARD COLOUR: Black

OTHER COLOURS: Not available

AVAILABLE: 9000 Series

HANDLE M



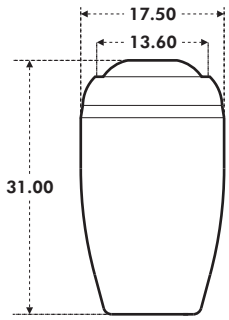

A tactile push button handle using the Apem IP67 sealed, momentary IS Series push button.

MATERIAL: Aluminium

FINISH: Anodised

STANDARD COLOUR: Black

OTHER COLOURS: Upon request

AVAILABLE: 1000, 4000 and 9000 Series

Note: The drawings above are not to scale and all dimensions shown are in millimeters.
Note: Different colour variants may be subject to minimum order quantities.

HANDLE SELECTION GUIDE

HANDLE N



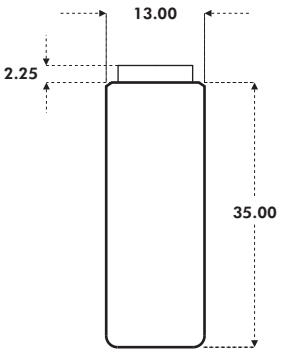

A soft touch push button handle, using the Apem 9633 Series switch.

MATERIAL: Aluminium

FINISH: Anodised

STANDARD COLOUR: Black

OTHER COLOURS: Upon request

AVAILABLE: 4000 and 9000 Series

HANDLE P



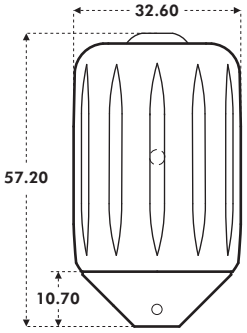

A premium, all metal, third axis handle with the IP67 sealed, IS Series push button switch.

MATERIAL: Aluminium

FINISH: Hard Anodised

STANDARD COLOUR: Black

OTHER COLOURS: Upon request

AVAILABLE: 9000 Series

HANDLE Q



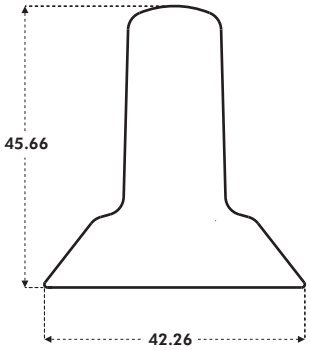

An ideal choice in external environments where mechanical protection of the gaiter is desirable.

MATERIAL: Nylon

FINISH: Matt

STANDARD COLOUR: Black

OTHER COLOURS: Upon request

AVAILABLE: 4000 and 9000 Series

HANDLE R



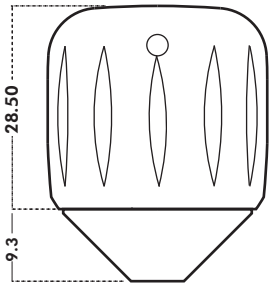

The standard, all metal, third axis handle for supreme robustness with a great look and feel.

MATERIAL: Aluminium

FINISH: Hard Anodised

STANDARD COLOUR: Black

OTHER COLOURS: Upon request

AVAILABLE: 4000 and 9000 Series

Note: The drawings above are not to scale and all dimensions shown are in millimeters.
Note: Different colour variants may be subject to minimum order quantities.

HANDLE SELECTION GUIDE

HANDLE V



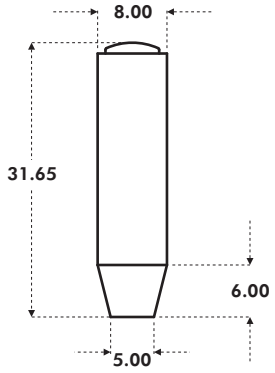

A tall slimline handle for the 5000 Series

MATERIAL: ABS

FINISH: Gloss

STANDARD COLOUR: Black

OTHER COLOURS: Not available

AVAILABLE: 5000 Series

HANDLE W



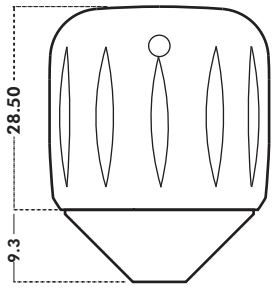

The standard third axis handle for the 5000 Series.

MATERIAL: Nylon

FINISH: Matt

STANDARD COLOUR: Black

OTHER COLOURS: Not available

AVAILABLE: 5000 Series

HANDLE Y



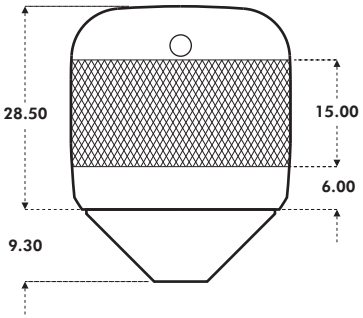

An all metal third axis handle, with a knurled finish, ideal for more industrial environments.

MATERIAL: Aluminium

FINISH: Anodised with diamond knurl

STANDARD COLOUR: Black

OTHER COLOURS: Not available

AVAILABLE: 4000 and 9000 Series

The total throw of all third axis handles is 55° (+/- 27.5 degrees). As standard the polarity of all the handles is incrementing when turned clockwise.

All third axis handles employ 5K potentiometers as standard regardless of the product series to which they are fitted.
The electrical outputs are tailored during manufacture to match the required specification of joystick to which they are fitted.

For further detail on any of the Apem handles, or for technical data on the Apem switches employed, please refer to your local Apem sales representative.

Note: The drawings above are not to scale and all dimensions shown are in millimeters.
Note: Different colour variants may be subject to minimum order quantities.

USB JOYSTICK INTERFACE MODULE

PRODUCT DESCRIPTION

GENERAL DESCRIPTION

The Apem USB joystick interface is designed to connect an Apem 9000 Series joystick with up-to 3 axes and 8 buttons to a USB port on a PC or Mac®. It is compatible with *Windows*® 98 / *Windows* 2000 and newer operating systems on the PC, as well as Mac OS® 9.0 / Mac OS X and newer on the Mac.

The interface is fully USB V1.1/2.0 and HID 1.1 compliant. It is compatible with standard system drivers, so no special drivers are required. There are 3 analogue inputs for X, Y and Z axes with 10 bit resolution and connections for up-to 8 push buttons.

MOUNTING

The interface board measurements and mounting points are shown below:

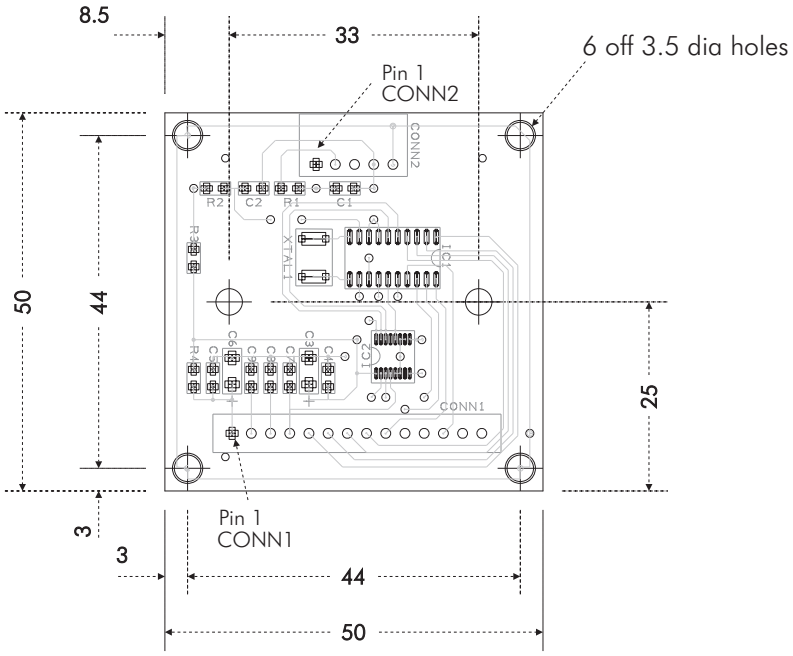

CONNECTIONS

USB connection is made to a 5 way Molex KK style header. A USB cable (1.5m long) is available seperately.
The joystick connects to a 14 way Molex KK style header.

USING THE JOYSTICK TO CONTROL THE MOUSE POINTER

A software utility can be downloaded from the internet that allows a joystick connected to the USB interface to control the mouse pointer. Please refer to the Virtual Projects Website http://www.vp-soft.com/software/joymouse.php for details on their 'Joymouse' software.

DATASHEET

For further details and a full USB interface datasheet, please refer to your local Apem sales representative.

Windows® 98 and *Windows* 2000 are registered trademarks of Microsoft Corporation in the United States and other countries.
Mac® and Mac OS® are registered trademarks of Apple Computer, Inc.