Directional valves → Electrically operated

5/2-way valve, Series TC15

► Qn = 1500 l/min ► pipe connection ► compressed air connection output: G 1/4 ► Electr. connection: Plug, M8, 3-pin ► manual override: with detent ► single solenoid, double solenoid



00120262

Version	Spool valve, zero overlap
Sealing principle	soft sealing
Mounting on manifold strip	P-strip
Working pressure min./max.	See table below
Control pressure min./max.	See table below
Ambient temperature min./max.	-10°C / +50°C
Medium temperature min./max.	-10°C / +50°C
Medium	Compressed air
Max. particle size	5 μm
Oil content of compressed air	0 mg/m³ - 5 mg/m³
Connector standard	EN 61076-2-101
Protection class according to EN 60529: with electrical connector/plug	IP 65
Status display LED	Yellow
Duty cycle	100 %
mounting screw tightening torque	2.5 Nm
Materials:	
Housing	Polyamide, fiber-glass reinforced
Seals	Acrylonitrile Butadiene Rubber; Hydrogenated nitrile butadiene rubber
Front plate	Polyamide, fiber-glass reinforced

Technical Remarks

- The pressure dew point must be at least 15 °C under ambient and medium temperature and may not exceed 3 °C.
- The oil content of air pressure must remain constant during the life cycle.
- Use only the approved oils from Bosch Rexroth, see chapter „Technical information“.

Operating voltage	Voltage tolerance	Power consumption
DC	DC	DC
		W
24 V	-10% / +10%	2.2

	MO	Compressed air connection				Operating voltage	Flow conductance		Flow rate value	Working pressure min./max.	Part No.
		Input	Output	Exhaust	Pilot connection	DC	b	C	Qn		
								[l/(s*bar)]	[l/min]	[bar]	
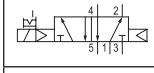		G 1/4	G 1/4	G 1/4	-	24 V	0.33	6.8	1500	2.5 / 10	R422100986
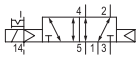		G 1/4	G 1/4	G 1/4	M5	24 V	0.33	6.8	1500	-0.9 / 10	R422100987
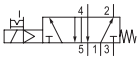		G 1/4	G 1/4	G 1/4	-	24 V	0.33	6.8	1500	3 / 10	R422100988
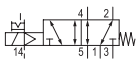		G 1/4	G 1/4	G 1/4	M5	24 V	0.33	6.8	1500	-0.9 / 10	R422100989

Part numbers marked in bold are available from the central warehouse in Germany, see the shopping basket for detailed information

Directional valves → Electrically operated

5/2-way valve, Series TC15

► Qn = 1500 l/min ► pipe connection ► compressed air connection output: G 1/4 ► Electr. connection: Plug, M8, 3-pin ► manual override: with detent ► single solenoid, double solenoid

	MO	Compressed air connection				Operating voltage	Flow conductance		Flow rate value	Working pressure min./max.	Part No.
		Input	Output	Exhaust	Pilot connection	DC	b	C	Qn		
								[l/(s*bar)]	[l/min]	[bar]	
		G 1/4	G 1/4	G 1/4	-	24 V	0.33	6.8	1500	2 / 10	R422100990
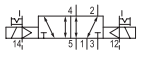		G 1/4	G 1/4	G 1/4	M5	24 V	0.33	6.8	1500	-0.9 / 10	R422100991

Part No.	Control pressure min./max.	Switch-on time	Switch-off time	Weight	Note
	[bar]	[ms]	[ms]	[kg]	
R422100986	2.5 / 10	21	22	0.235	1)
R422100987	2.5 / 10	21	22	0.235	2)
R422100988	3 / 10	12	35	0.235	1)
R422100989	3 / 10	12	35	0.235	2)
R422100990	2 / 10	10	10	0.265	1)
R422100991	2 / 10	10	10	0.265	2)

MO = Manual override
1) Pilot: internal
2) Pilot: external
Nominal flow Qn at 6 bar and Δp = 1 bar

5/2-way valve, Series TC15

► Qn = 1500 l/min ► pipe connection ► compressed air connection output: G 1/4 ► Electr. connection: Plug, M8, 3-pin ► manual override: with detent ► single solenoid, double solenoid

Dimensions, single solenoid

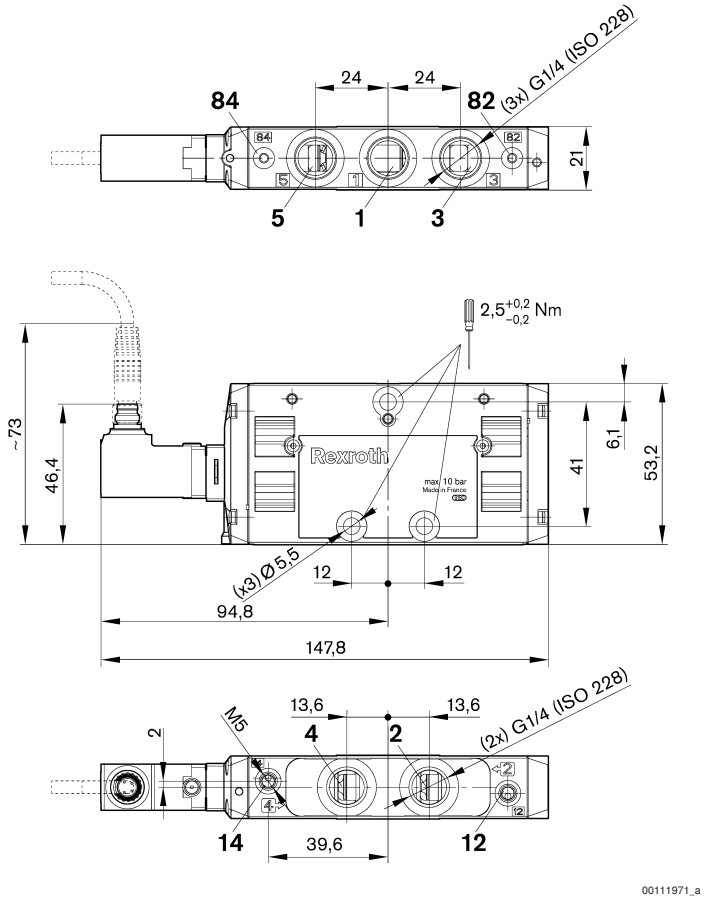

Directional valves → Electrically operated

5/2-way valve, Series TC15

► Qn = 1500 l/min ► pipe connection ► compressed air connection output: G 1/4 ► Electr. connection: Plug, M8, 3-pin ► manual override: with detent ► single solenoid, double solenoid

Dimensions, double solenoid

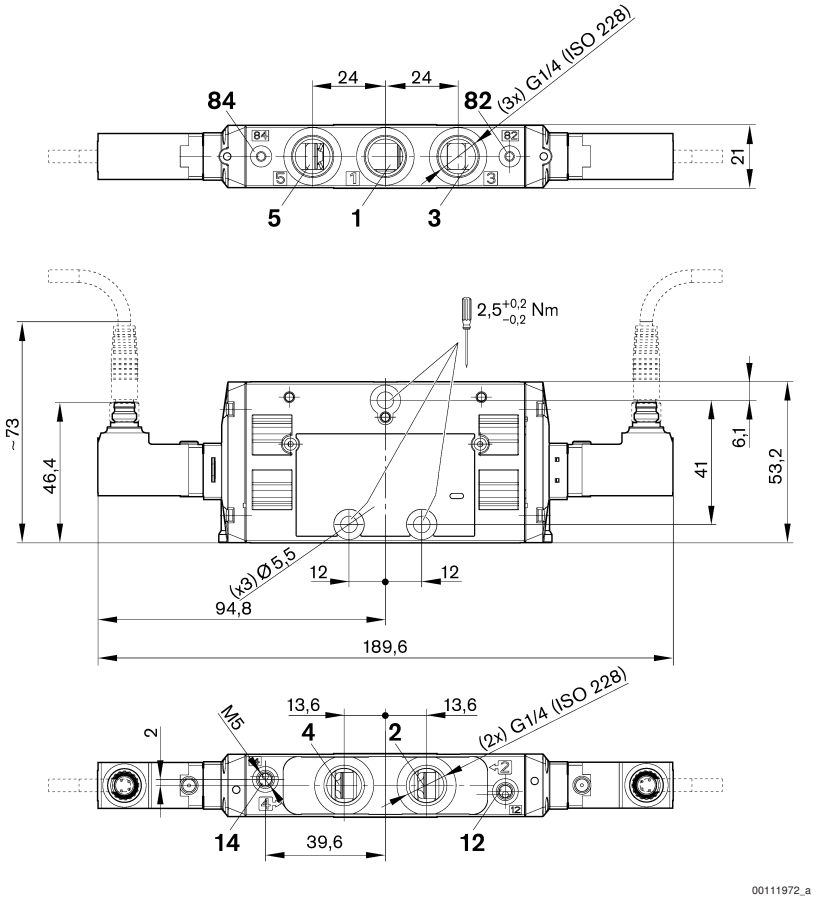

PIN assignment for electrical connector

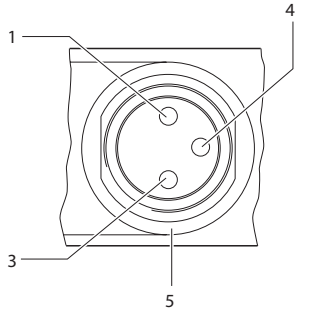

Pin assignment:
1) Pin not assigned
3) 0 V
4) 24 V
5) LED

Note: Bi-polar protective circuit to prevent overvoltage