E43305

Process adapter hygienic pipe fitting

ADAPT G1/2-DIN11851 DN40

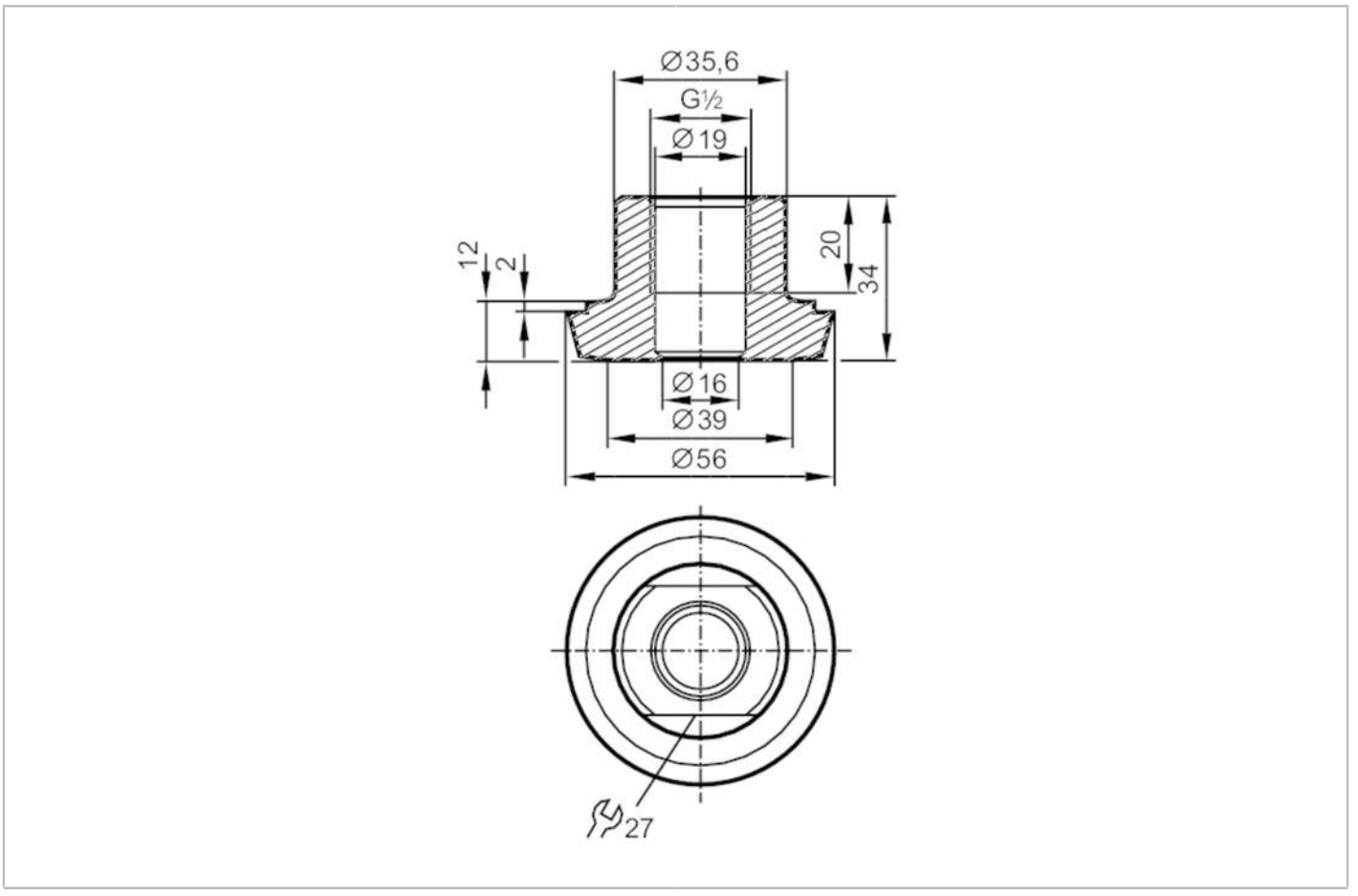

EC 1935/2004 FCM FDA

Application		
Pressure rating	[bar]	40
Tests / approvals		
Pressure Equipment Directive		A possible classification to PED depends on the application and has to be carried out by the user / operator.
Pressure Equipment Directive EAC		The adapter is intended for use in devices, machines and installations that do not fall under the categories of the technical rule TR CU 032/2013.
Safety instructions		The compatibility between medium and product material has to be checked in all applications.
Mechanical data		
Weight	[g]	341.5
Materials		stainless steel (1.4435 / 316L)
Sensor connection		G 1/2 sealing cone
Process connection		hygienic pipe fitting DN40 (1,5") DIN 11851
Surface characteristics Ra/Rz of the wetted parts		0.4 / 4
Hygienic equipment class to DIN 11866		H4
Remarks		
Pack quantity		1 pcs.