stay connected

M12 MALE 90°

PUR 4X0.34 black UL/CSA, drag ch 10m

Male 90°
M12, 4-pole
with cable sleeves

Plastic housings with good resistance against chemicals and oils. The resistance to aggressive media should be individually tested for your application. Further details on request. Further cable lengths on request.

Link to Product

Illustration

The information in this brochure has been compiled with the utmost care.
Liability for the correctness completeness and topicality of the information is restricted to gross negligence. Version: 01/20

stay connected



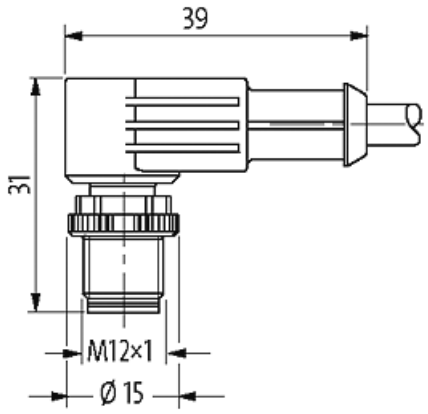

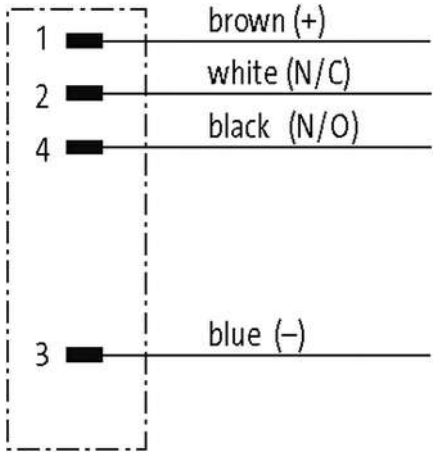

Male

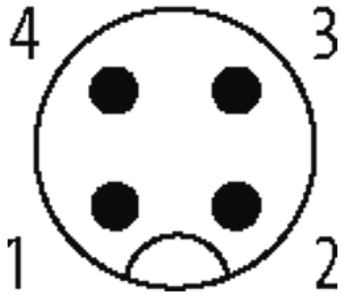

Product may differ from Image

Approvals

The information in this brochure has been compiled with the utmost care.
Liability for the correctness completeness and topicality of the information is restricted to gross negligence. Version: 01/20

c UL us Listed * | * only for products with UL/CSA approved cable | cCSAus | CE | EAC

Form	
Form	12101
Cables	
No./diameter of wires	4× 0.34 mm²
Wire isolation	PP (br, wh, bl, bk)
C-track properties	10 Mio.
Material (jacket)	PUR (UL/CSA)
Outer Ø	4.5 mm ±5%
Bend radius (moving)	10× outer Ø
Temperature range (fixed)	-40...+80 °C
Temperature range (mobile)	-25...+80 °C
Cable identification	634
Cable Type	3 (PUR)
Approval (cable)	cRUus (AWM-Style 20549/10493); CE conform
Cable weight [g/m]	36,30
Material (wire)	Cu wire, bare
Resistor (core)	max. 57 Ω/km (20 °C)
Single wire Ø (core)	0.1 mm
Construction (core)	42× 0.1 mm (multi-strand wire class 6)
Diameter (core)	4× 0.34 mm²
AWG	similar to AWG 22
Material (wire isolation)	PP
Material property (wire isolation)	CFC-, halogen-, cadmium-, silicone- and lead-free
Shore hardness (wire isolation)	70 ±5 D
Wire-Ø incl. isolation	1.25 mm ±5%
Color/numbering of wires	br, bk, bl, wh
Stranding combination	4 wires twisted
Shield	no
Material (jacket)	PUR
Material property (jacket)	CFC-, halogen-, cadmium-, silicone- and lead-free, matt, low-adhesion, machine easy to process, abrasion-resistant, hydrolysis and microbial resistant
Shore hardness (jacket)	90 ±5 A
Outer-Ø (jacket)	4.5 mm ±5%
Color (jacket)	black
chemical resistance	good resistance to oil, gasoline and chemicals (EN 60811-404)
thermal resistance	flame retardant UL 1581 VW1 / CSA FT1 / IEC 60332-1, IEC 60332-2-2
Nominal voltage	300 V AC
Test voltage	2500 V AC
Current load capacity	to DIN VDE 0298-4
Temperature range (fixed)	-40...+80 °C, (+90 °C at max. 10 000 operating hours)
Temperature range (mobile)	-25...+80 °C, (+90 °C at max. 10 000 operating hours)
Bend radius (fixed)	5× outer Ø
Bend radius (moving)	10× outer Ø
No. of bending cycles (C-track)	max. 10 Mio. (25 °C)
Travel speed (C-track)	max. 3 m/s
Acceleration (C-track)	max. 10 m/s²

The information in this brochure has been compiled with the utmost care.
Liability for the correctness completeness and topicality of the information is restricted to gross negligence. Version: 01/20

Torsion stress	±180°/m
No. of torsion cycles	max. 2 Mio. (25 °C)
Torsion speed	35 cycles/min
Jacket Color	black
Technical Data	
Operating voltage	max. 250 V AC/DC
Operating voltage (only UL listed)	max. 30 V AC/DC
Rated surge voltage	2.5 kV
Operating current per contact	max. 4 A
Material group	IEC 60664-1, category I
Coding	A-coded
Locking of ports	Screw thread (M12×1 mm) recommended torque 0.6 Nm, self-securing
Compression gland	M12 (SW13)
Protection	IP65, IP66K, IP67 inserted and tightened (EN 60529)
Locking material	Zinc die casting, matte nickel plated
Material	PUR
suitable for corrugated tube (internal Ø)	10 mm
General data	
Standards	DIN EN 61076-2-101 (M12)
Pollution Degree	3
Temperature range	-25...+85 °C, depending on cable quality
Commercial data	
country of origin	CZ
customs tariff number	85444290
EAN	4048879215466
eClass	27279218
Packaging unit	1

The information in this brochure has been compiled with the utmost care.
Liability for the correctness completeness and topicality of the information is restricted to gross negligence. Version: 01/20