E43230

Coaxial pipe for level sensors

LR COAX TUBE G3/4 L150

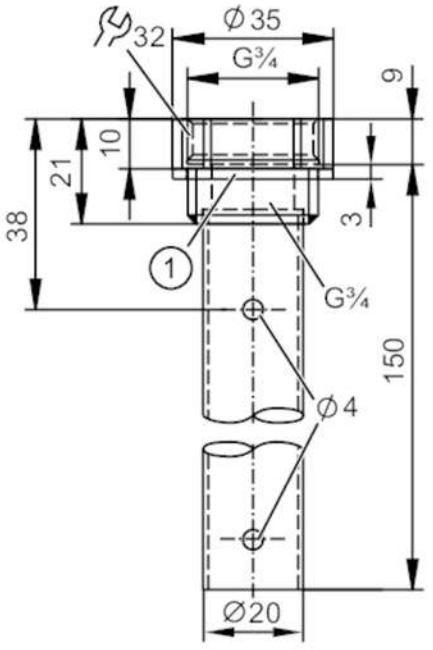

1 Gasket

CRN

Application		
Design		for level sensors LR
Medium temperature	[°C]	-20...200
Pressure rating	[bar]	16
Vacuum resistance	[mbar]	-1000
MAWP (for applications according to CRN)	[bar]	16
Mechanical data		
Weight	[g]	135
Materials		Coaxial pipe: stainless steel (1.4301 / 304); Sealing: NBR reinforced fibre; Centring piece: PPS reinforced fibre; Fixing strap: stainless steel (1.4310 / 301)
Sensor connection		threaded connection G 3/4 external thread
Process connection		threaded connection G 3/4 internal thread
Length	[mm]	150
Accessories		
Items supplied		sealings: 1
Remarks		
Pack quantity		1 pcs.