HYGRASREG® LS

Leakage sensor / water ingress detector with switching output

S+S REGELTECHNIK

The leakage sensor / water ingress detector **HYGR**ASREG® **LS** with leakage location is used to detect water ingresses and ingresses of conductive liquids. It is designed for the early detection of water leakages to protect sensitive electrical and electronic equipment in buildings against moisture.
The water ingress detector consists of an electronic monitoring system with LED status indicator, and a matching electrode, which can be extended by the user.

LS-2



TECHNICAL DATA

Power supply:	24 V AC (± 20 %) and 15...36 V DC
Power consumption:	< 1.0 VA / 24 V DC; < 2.2 VA / 24 V AC
Operating range electronics module:	10... 95 % RH; 0...+50 °C
Monitoring range:	conductive liquids between the probes
Switching threshold:	conductance between electrodes > threshold
Output:	potential-free changeover contact (24 V), 1 A ohmic load
Housing:	plastic, UV-resistant, material polyamide, 30 % glass-globe reinforced, with quick-locking screws (slotted / Phillips head combination), colour traffic white (similar to RAL 9016), housing cover is transparent!
Housing dimensions:	72 x 64 x 43.3 mm (Tyr 1)
Cable connection:	**cable gland**, plastic (M 16 x 1.5; with strain relief, exchangeable, inner diameter 10.4 mm) **or** **M12 connector** according to DIN EN 61076-2-101 (optional on request)
Electrical connection:	0.14 - 1.5 mm² via terminal screws
Process connection:	two external probes, laid according to measuring task (on the **LS-2**) or upright on electrodes with insulating plastic caps, which are mounted on the housing underside (on the **LS-4**)
Mounting accessories:	for device type **LS-2** (2 electrodes 10 mm, already permanently mounted) **Electrode extension** 15 mm, 20 mm and 30 mm, 2 pieces each, stainless steel **V2A** (1.4301) (enclosed) **Cable sensor**, L = 1 m (optional)
Protection class:	III (according to EN 60 730)
Protection type:	**IP 65** (according to EN 60 529) Housing tested, TÜV SÜD, Report No. 713139052 (Tyr 1)
Standards:	CE conformity, electromagnetic compatibility according to EN 61 326, EMC directive 2014 / 30 / EU
FUNCTION	The leak sensor can be set using DIP switches so that the relay is energised during normal operation. This means that relay opens in the event of a fault (water damage, cable breakage, power failure). This also enables a break in the cable to the sensor to be detected.

LS-4







Schematic diagram **LS**

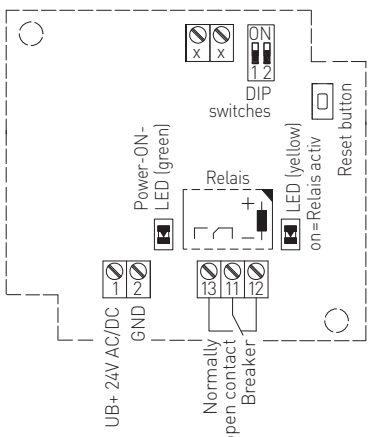

Self-locking (selectable)	**DIP 1**
Self-locking ON	**ON**
Self-locking OFF	OFF
Relay status (selectable)	**DIP 2**
Normally open contact OPEN	**ON**
Normally open contact CLOSED	OFF

Connecting diagram **LS**

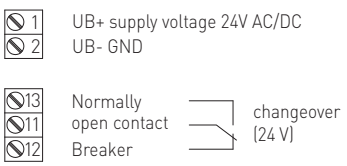

Dimensional drawing **LS-2**

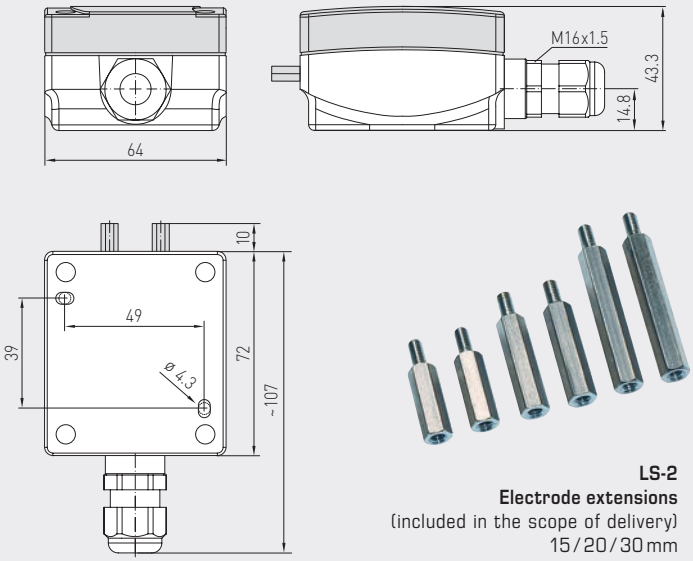

LS-2
Electrode extensions
(included in the scope of delivery)
15 / 20 / 30 mm

LS-2



Dimensional drawing **LS-4**

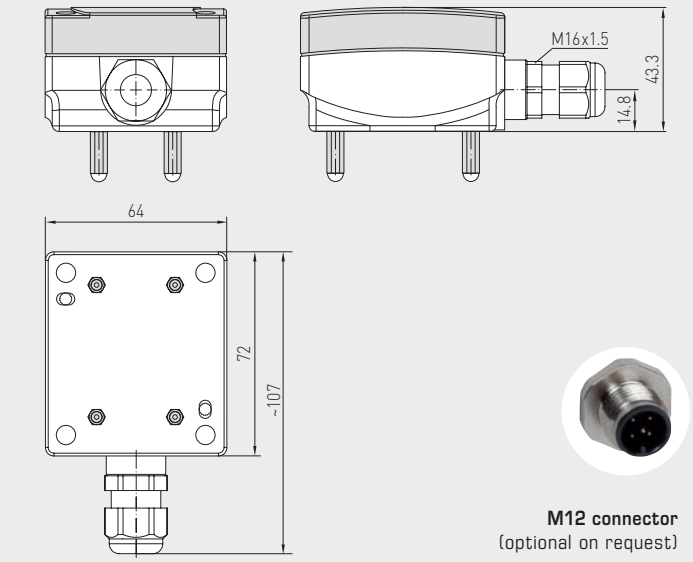

M12 connector
(optional on request)

LS-4



HYGRASREG® LS	Leakage sensor / water ingress detector			
Type / WG01	**Detection of leakage of conductive liquids**	**Output** Humidity (relative)	**Item No.**	**Price**
LS				
LS-2	Conductance > switching threshold	Changeover contact	1202-1042-0000-000	**107,34 €**
LS-4	Conductance > switching threshold	Changeover contact	1202-1042-0000-100	**121,51 €**
Optional:	Cable connection with **M12 connector** according to DIN EN 61076-2-101		on request	

ACCESSORIES			
LS-Kabelsonde	**Cable sensor**, L = 1 m, for device type **LS-2**	1202-1042-0000-001	**26,23 €**
	For further information, see last chapter Accessories!		