Heavy-Duty Beacons / Double Flash Beacon

Double Flash Beacon BM 230VAC RD



Part No.: 839.152.68

MECHANICAL DATA	
Height	189 mm
Diameter	153 mm
Materials	Aluminium PC
Dome colour	Red
Housing colour	Black
Protection category	IP66 IP67
Connection	Screw terminals
cross-sectional area maximum	2,50mm² / 14AWG
Cable entry	Screwed cable gland
Cable entry minimum	d = 6 mm
Cable entry maximum	d = 13 mm
Tension relief	Present (conforms to VDE)
Type of fixing	Base mounting
Working temperature minimum	-30°C
Working temperature maximum	+50°C
Weight with packaging	1417 g
Product weight	1301 g

ELECTRICAL DATA	
Operating voltage	230V
Operating voltage type	AC
Operating voltage frequency	50Hz
Operating voltage tolerance	+/- 10%
Rated operational voltage	230 VAC
Rated operational current	200 mA
Rated inrush current	2.000 mA
Protection class	Protection class 1
Pollution degree	3
Overvoltage category	II
Isolation voltage	Ui = 250V; Uimp = 2.500V

OPTICAL DATA	
Light source	Xenon
Light colour	Red
Optical signal image	Double flash
Flash frequency	1 Hz
Flash output	15 J

! For additional installation and mounting information, refer to the appropriate user guide at www.werma.com. This printed copy is for information only and is subject to alteration.

Heavy-Duty Beacons / Double Flash Beacon

Double Flash Beacon BM 230VAC RD

Service life optical	4 million flashes minimum

APPROVAL DATA	
Conforms with CE	Yes
WEEE	Yes
Conforms with ATEX-directive	No
Conforms with CCC	Yes
Conforms with UL	No
Conforms with FCC	No
Conforms with IC	No
EAC certificate available	Yes
Conforms with UKCA (Importer)	Yes (WERMA (UK) Ltd.)
Conforms with AS-I	No
ICAO Certification	No
Conforms with DNV	No
Conforms with RoHS CN	No
Conforms with VdS	No

! For additional installation and mounting information, refer to the appropriate user guide at www.werma.com. This printed copy is for information only and is subject to alteration.

Heavy-Duty Beacons / Double Flash Beacon

Double Flash Beacon BM 230VAC RD

DRAWING

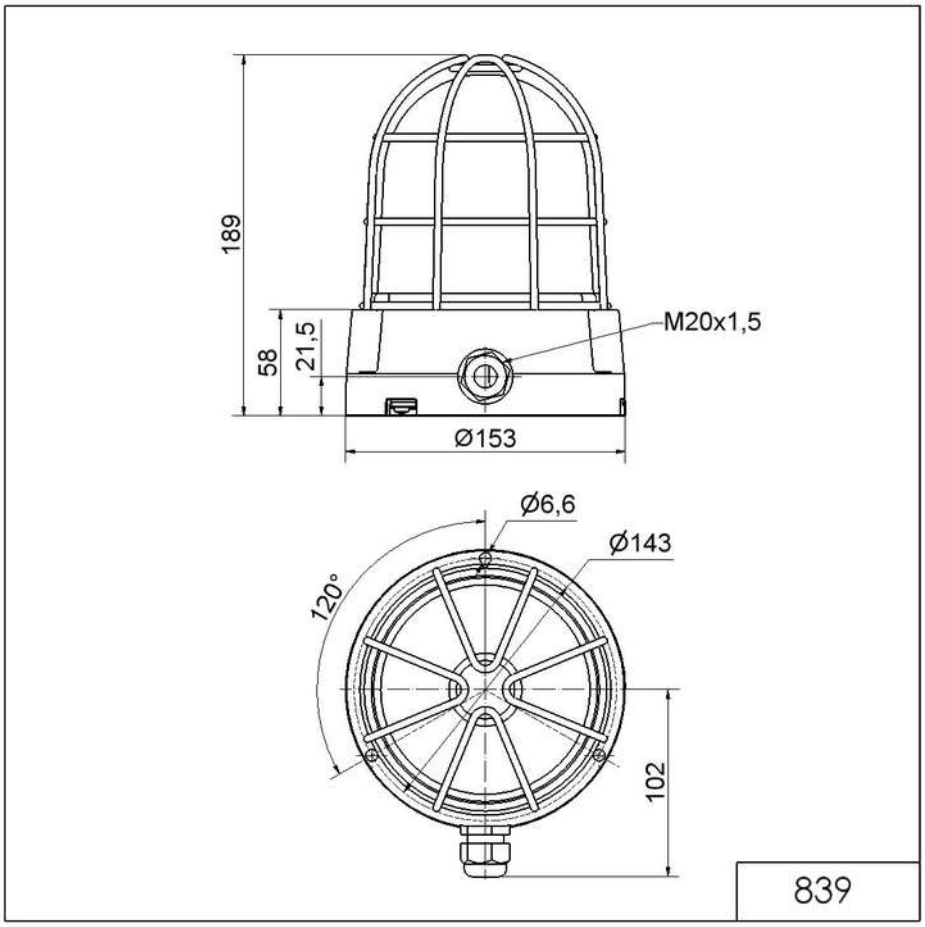

! For additional installation and mounting information, refer to the appropriate user guide at www.werma.com. This printed copy is for information only and is subject to alteration.