EVC08A

Connecting cable with plug

ASTAH040VAT0002H04/3G/2D

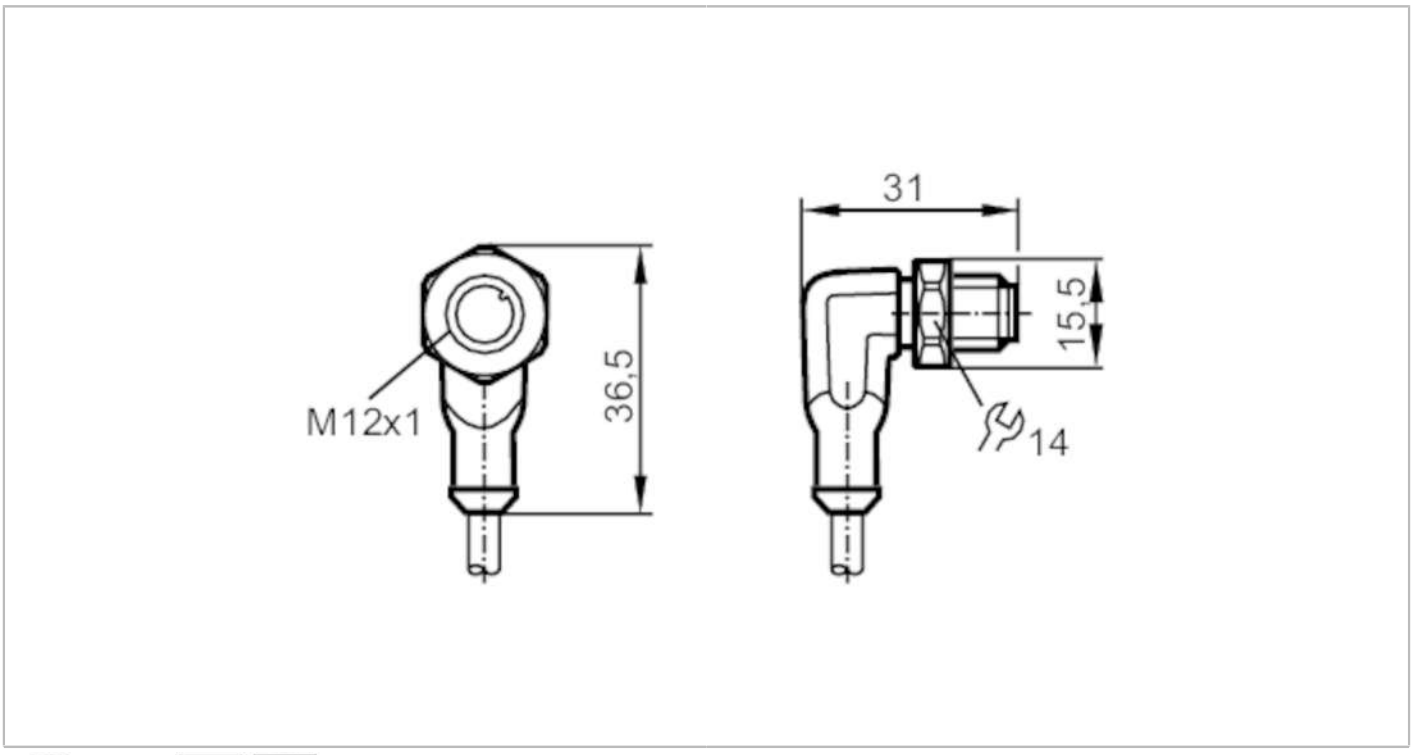

Application		
Special feature		Free from silicone; Halogen-free; Gold-plated contacts
Free from silicone		yes
Electrical data		
Operating voltage	[V]	< 60 AC/DC
Protection class		II
Max. current load total	[A]	2
Operating conditions		
Ambient temperature	[°C]	-20...60
Protection		IP 67; (when used outside the hazardous area: IP 68 / IP 69K)
Tests / approvals		
Approval		BVS 08 ATEX E 109 U; IECEx BVS 08.0041 U
ATEX marking		II 3G Ex ec IIC Gc; II 2D Ex tb IIIC Db IP65/IP67
Mechanical data		
Weight	[g]	102.2
Materials		housing: TPU orange
Material nut		stainless steel (1.4404 / 316L)
Remarks		
Pack quantity		1 pcs.

EVC08A

Connecting cable with plug

ASTAH040VAT0002H04/3G/2D

Electrical connection

Cable: 2 m, PUR, Halogen-free, black, Ø 4.9 mm; 4 x 0.34 mm² (42 x Ø 0.1 mm)

Electrical connection - plug

Connector: 1 x M12, angled; coding: A; Locking: stainless steel (1.4404 / 316L); Contacts: gold-plated; Tightening torque: 1.2...1.5 Nm



Connection

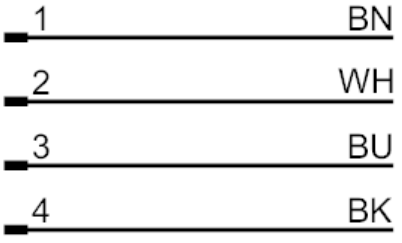

	Core colours :
BK =	black
BN =	brown
BU =	blue
WH =	white