stay connected

MSDD pass-through RJ45 CAT5e femal/femal, design silver

Pass-through
1× RJ45, 8-pole CAT5e (female/female)

Link to Product

Illustration



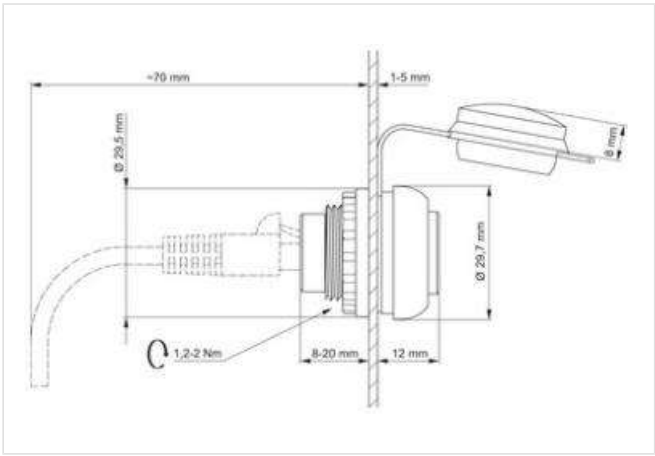

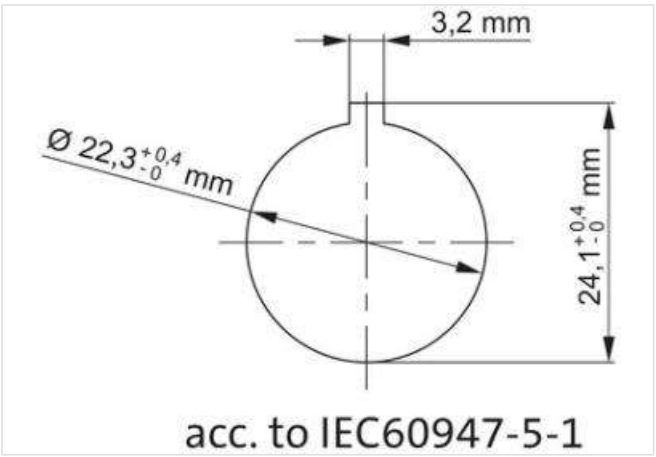

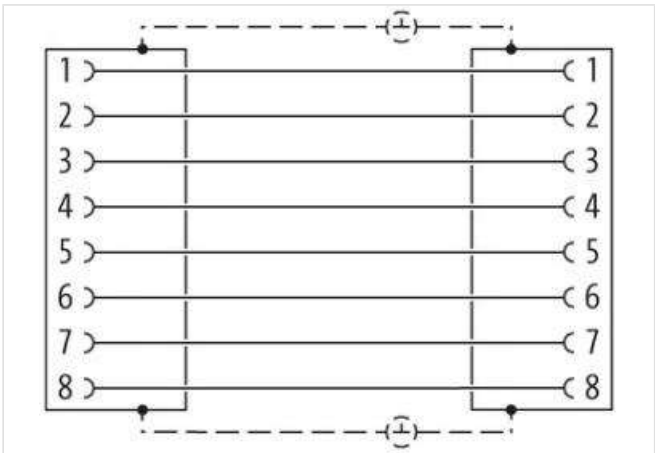

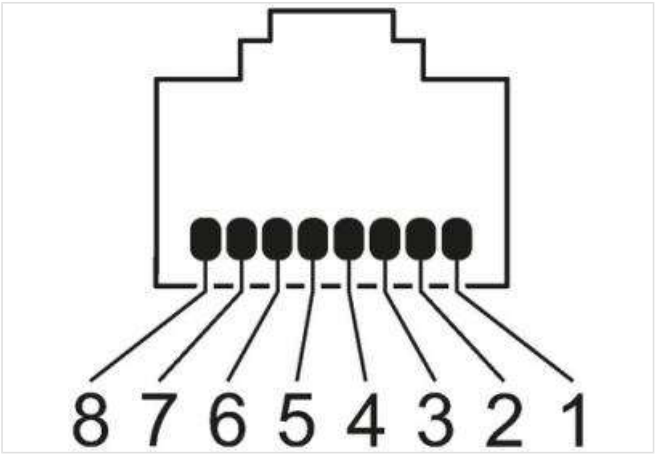

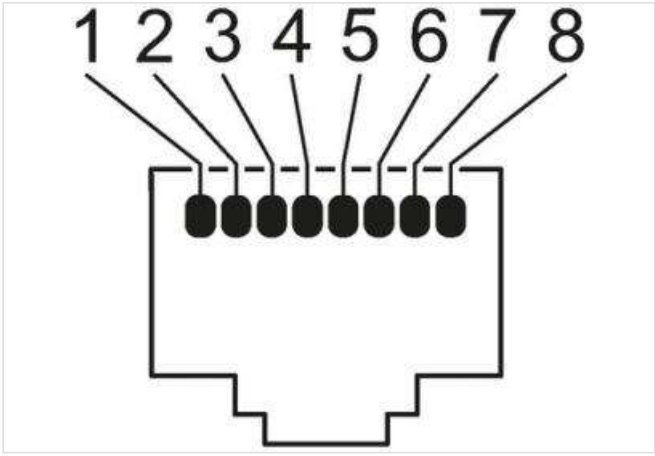

Product may differ from Image

The information in this brochure has been compiled with the utmost care.
Liability for the correctness completeness and topicality of the information is restricted to gross negligence. Version: 2023-03-17

MURR ELEKTRONIK
stay connected

Technical Data	
Operating voltage	24 V AC/DC
Operating current	max. 1.5 A
Protection NEMA	Type 2, 3R, 4, 4x, 12, 13 (UL 50E)
Specification	RJ45 Cat 5e female/female shielded
Mounting depth mounted	approx. 70 mm
General data	
Shielded	yes
Cut-out	Ø 22.5 mm
Mechanical protection	
Mechanical endurance	750
Product article number of manufacturer	4000-73000-0010000
Industrial Communication	
Data transmission rate max.	1000 MBit/s
Mechanical data	
Depth	20 mm
Diameter	29,5 mm

The information in this brochure has been compiled with the utmost care.
Liability for the correctness completeness and topicality of the information is restricted to gross negligence. Version: 2023-03-17