Angular contact ball bearings

3205-BD-XL-2HRS-TVH (Series 32..-BD-2HRS)

main dimensions to DIN 628-3, double row, lip seals on both sides, contact angle α = 30°

The datasheet is only an overview of dimensions and basic load ratings of the selected product. Please always observe all the guidelines in these overview pages. Further information is given on many products under the menu item "Description". You can also order comprehensive information via the Catalogue selection system (http://www.fag.de/content.fag.de/en/mediathek/library/library.jsp) or by telephone on +49 (91 32) 82 - 28 97.

d	25	mm	
D	52	mm	
B	20,6	mm	
a	30,8	mm	
D_2	47,6	mm	
d_2	34,2	mm	
$D_{a\ max}$	46,4	mm	
$d_{a\ min}$	30,6	mm	
$r_{a\ max}$	1	mm	
r_{min}	1	mm	
α	30	°	Contact angle
m	0,176	kg	Mass
C_r	22000	N	Basic dynamic load rating, radial
C_{0r}	15200	N	Basic static load rating, radial
C_{ur}	1020	N	Fatigue limit load, radial
n_G	10700	1/min	Limiting speed

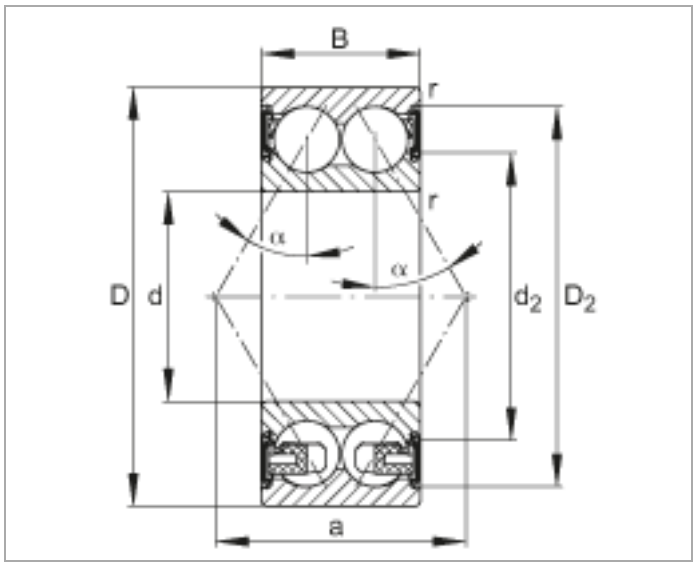
B
r
r
α
α
D
d
d2
D2
a

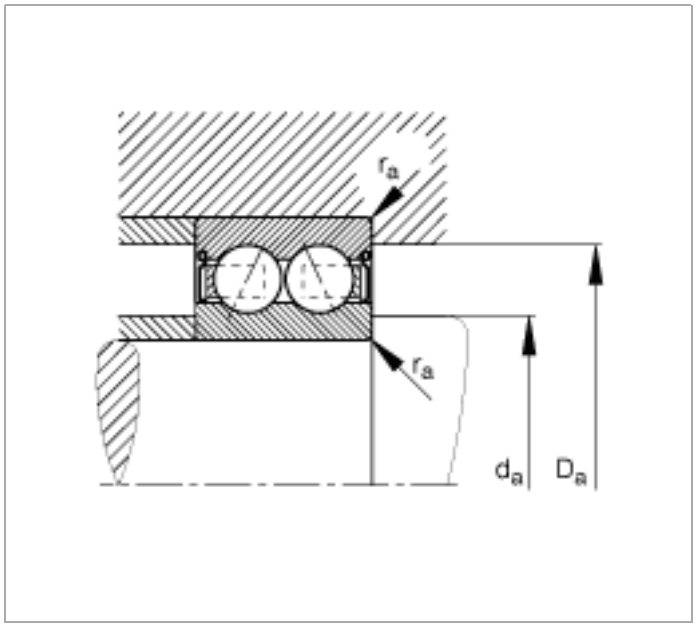
ra
ra
da
Da