BF11500A02460

THREE-POLE CONTACTOR, IEC OPERATING CURRENT IE (AC3) = 115A, AC COIL 60HZ, 24VAC



Product designation			Power contactor
Product type designation			BF115
Contact characteristics			
Number of poles		Nr.	3
Rated insulation voltage Ui IEC/EN		V	1000
Rated impulse withstand voltage Uimp		kV	8
Operational frequency			
	min	Hz	25
	max	Hz	400
IEC Conventional free air thermal current Ith		A	160
Operational current Ie			
	AC-1 (≤40°C)	A	160
	AC-1 (≤55°C)	A	130
	AC-1 (≤70°C)	A	115
	AC-3 (≤440V ≤55°C)	A	115
	AC-4 (400V)	A	54
Rated operational power AC-3 (T≤55°C)			
	230V	kW	37
	400V	kW	55
	415V	kW	55
	440V	kW	55
	500V	kW	75
	690V	kW	110
	1000V	kW	55
IEC max current Ie in DC1 with L/R ≤ 1ms with 1 poles in series			
	≤24V	A	160
	48V	A	160
	75V	A	120
	110V	A	10
	220V	A	–
IEC max current Ie in DC1 with L/R ≤ 1ms with 2 poles in series			
	≤24V	A	160
	48V	A	160
	75V	A	160
	110V	A	130
	220V	A	14
IEC max current Ie in DC1 with L/R ≤ 1ms with 3 poles in series			
	≤24V	A	160
	48V	A	160
	75V	A	160
	110V	A	140
	220V	A	145
IEC max current Ie in DC1 with L/R ≤ 1ms with 4 poles in series			
	≤24V	A	160
	48V	A	160

The characteristics described in this document are subject to updates or modifications at any time. The descriptions, technical and functional information, illustrations and instructions in this brochure are purely illustrative, and are consequently not contractually binding

	75V	A	160
	110V	A	160
	220V	A	160
IEC max current Ie in DC3-DC5 with L/R ≤ 15ms with 1 poles in series			
	≤24V	A	160
	48V	A	50
	75V	A	40
	110V	A	6
	220V	A	–
IEC max current Ie in DC3-DC5 with L/R ≤ 15ms with 2 poles in series			
	≤24V	A	160
	48V	A	72
	75V	A	65
	110V	A	65
	220V	A	7
IEC max current Ie in DC3-DC5 with L/R ≤ 15ms with 3 poles in series			
	≤24V	A	160
	48V	A	150
	75V	A	100
	110V	A	100
	220V	A	92
IEC max current Ie in DC3-DC5 with L/R ≤ 15ms with 4 poles in series			
	≤24V	A	160
	48V	A	120
	75V	A	120
	110V	A	125
	220V	A	115
Short-time allowable current for 10s (IEC/EN60947-1)		A	920
Protection fuse			
	gG (IEC)	A	200
	aM (IEC)	A	125
Making capacity (RMS value)		A	1500
Breaking capacity at voltage			
	440V	A	1200
	500V	A	850
	690V	A	905
Resistance per pole (average value)		mΩ	0.45
Power dissipation per pole (average value)			
	Ith	W	11.5
	AC3	W	6.0
Tightening torque for terminals			
	min	Nm	6
	max	Nm	7
	min	lbin	4.4
	max	lbin	5.2
Tightening torque for coil terminal			
	min	Nm	0.8
	max	Nm	1
	min	lbin	0.59
	max	lbin	0.74
Conductor section			
AWG/Kcmil			
	max		2/0

The characteristics described in this document are subject to updates or modifications at any time. The descriptions, technical and functional information, illustrations and instructions in this brochure are purely illustrative, and are consequently not contractually binding

Flexible w/o lug conductor section				
		min	mm²	1.5
		max	mm²	70
Flexible c/w lug conductor section				
		min	mm²	1.5
		max	mm²	70
Power terminal protection according to IEC/EN 60529				IP20 front
Mechanical features				
Operating position				
		normal		Vertical plan
		allowable		±30°
Fixing				Screw / DIN rail 35mm
Weight			g	2020
Conductor section				
AWG/kcmil conductor section				
		max		2/0
Operations				
Mechanical life			cycles	15000000
Electrical life			cycles	1200000
AC coil operating				
Rated AC voltage at 60Hz			V	24
AC operating voltage				
of 50/60Hz coil powered at 50Hz				
drop-out				
		max	%Us	55
of 60Hz coil powered at 60Hz				
pick-up				
		min	%Us	80
		max	%Us	110
drop-out				
		min	%Us	20
		max	%Us	55
AC average coil consumption at 20°C				
of 60Hz coil powered at 60Hz				
		in-rush	VA	300
		holding	VA	20
Max cycles frequency				
Mechanical operation			cycles/h	1500
Operating times				
Average time for Us control				
in AC				
Closing NO				
		min	ms	16
		max	ms	32
Opening NO				
		min	ms	9
		max	ms	24
UL technical data				
Yielded mechanical performance				
for three-phase AC motor				
		200/208V	HP	40
		220/230V	HP	40
		460/480V	HP	75

The characteristics described in this document are subject to updates or modifications at any time. The descriptions, technical and functional information, illustrations and instructions in this brochure are purely illustrative, and are consequently not contractually binding

		575/600V	HP	100
General USE				
	Contactor			
		AC current	A	165
Short-circuit protection fuse, 600V				
	High fault			
		Short circuit current	kA	100
		Fuse rating	A	200
		Fuse class		J
	Standard fault			
		Short circuit current	kA	10
		Fuse rating	A	250
		Fuse class		RK5

Ambient conditions

Temperature				
	Operating temperature			
		min	°C	-50
		max	°C	70
	Storage temperature			
		min	°C	-60
		max	°C	+80
Max altitude			m	3000

Dimensions

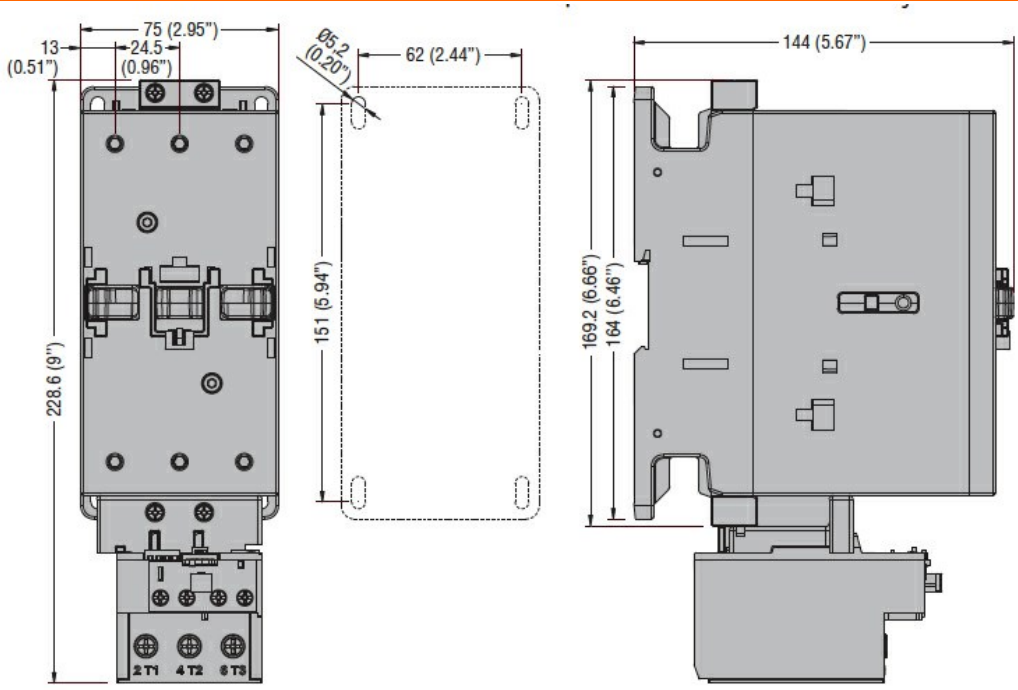

Wiring diagrams

The characteristics described in this document are subject to updates or modifications at any time. The descriptions, technical and functional information, illustrations and instructions in this brochure are purely illustrative, and are consequently not contractually binding

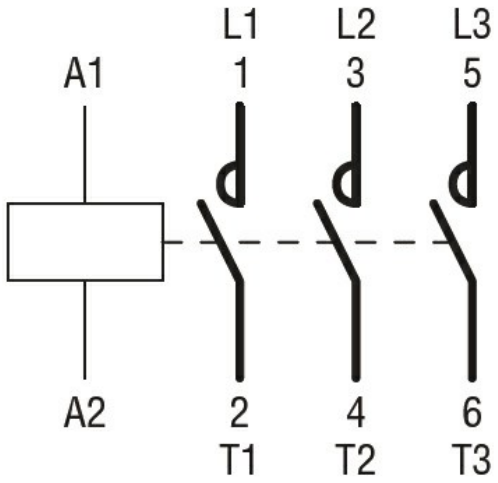

Certifications and compliance

Compliance

CSA C22.2 n° 60947-1
CSA C22.2 n° 60947-4-1
IEC/EN/BS 60947-1
IEC/EN/BS 60947-4-1
UL 60947-1
UL 60947-4-1

Certificates

CCC
cULus

ETIM classification

ETIM 8.0	EC000066 - Power contactor, AC switching

The characteristics described in this document are subject to updates or modifications at any time. The descriptions, technical and functional information, illustrations and instructions in this brochure are purely illustrative, and are consequently not contractually binding