E10191

Connecting cable with socket

ADOGA030MSS0005E03

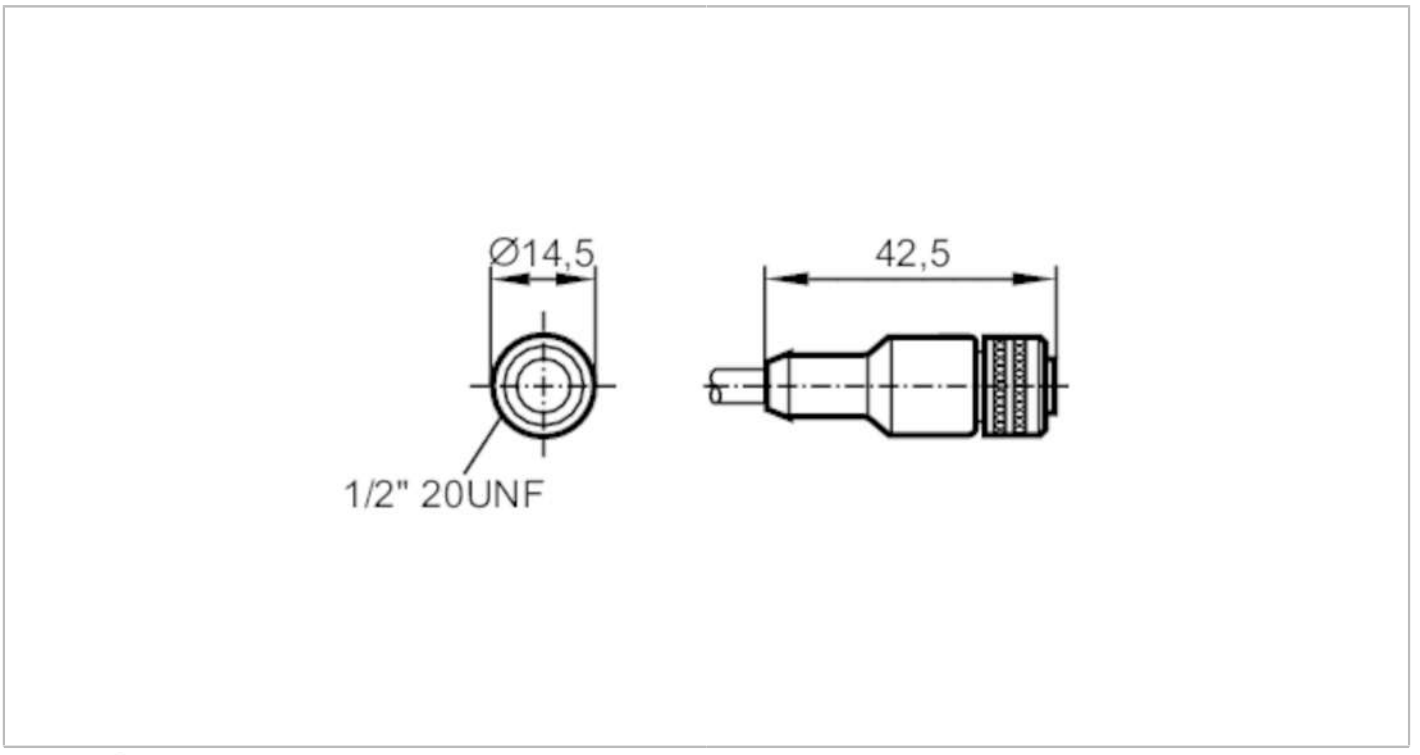

Application			
Special feature		Drag chain suitability	
Electrical data			
Operating voltage	[V]	< 250 AC/DC	
Max. current load total	[A]	4; (40° C)	
Operating conditions			
Ambient temperature	[°C]	-25...85	
Protection		IP 67	
Tests / approvals			
UL approval		Ta	< 75 °C
		File number UL	E191684
Mechanical data			
Weight	[g]	197.8	
Dimensions	[mm]	14.5 x 14.5 x 42.5	
Materials		TPU	
Moulded-body material		TPU	
Material nut		brass, nickel-plated	
Drag chain suitability		yes	
Drag chain suitability		bending radius for flexible use	min. 10 x cable diameter
		travel speed	max. 3.3 m/s for a horizontal travel length of 5 m and max. acceleration of 5 m/s²
		bending cycles	> 2 Mio.
		torsional strain	± 180 °/m

E10191

Connecting cable with socket

ADOGA030MSS0005E03

Remarks	
Pack quantity	1 pcs.

Electrical connection

Cable: 5 m, PVC, yellow, Ø 5.2 mm; 3 x (42 x Ø 0.1 mm) / AWG 22

Electrical connection - socket

Connector: 1 x 1/2", straight; coding: C; Moulded body: TPU; Locking: brass, nickel-plated

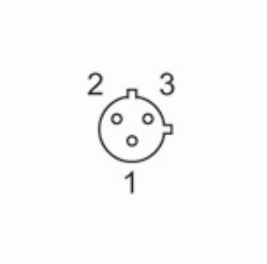

Connection

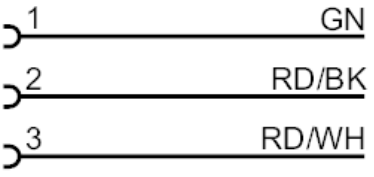

	Core colours :
GN =	green
RD/BK =	red/black
RD/WH =	red/white