

TELEDYNE RELAYS

A Unit of Teledyne Electronics and Communications

COMMERCIAL SENSITIVE TO-5 RELAYS

DPDT

SERIES 732

SERIES DESIGNATION	RELAY TYPE
732	DPDT basic relay
732D	DPDT relay with internal diode for coil transient suppression
732TN	DPDT relay with internal transistor driver and coil transient suppression diode

INTERNAL CONSTRUCTION

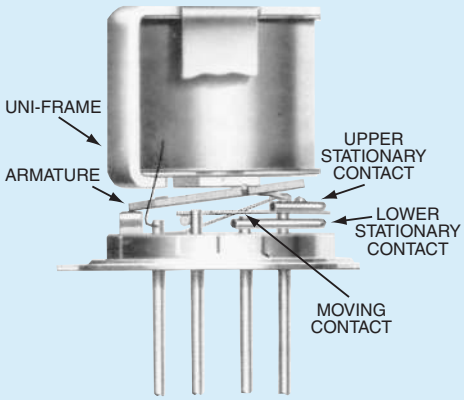

DESCRIPTION

The TO-5 relay, originally conceived and developed by Teledyne, has become one of the industry standards for low-level switching from dry circuit to 1 ampere. Designed for high-density PC board mounting, the 732 relay is one of the most versatile ultraminiature relays available because of its small size and low coil power dissipation.

The following unique construction features and manufacturing techniques provide excellent resistance to environmental extremes and overall high reliability:

- All welded construction.
- Unique uni-frame design providing high magnetic efficiency and mechanical rigidity.
- High force/mass ratios for resistance to shock and vibration.
- Advanced cleaning techniques provide maximum assurance of internal cleanliness.
- Precious metal alloy contact material with gold plating assures excellent high current and dry circuit switching capabilities.

The 732D relay has an internal discrete silicon diode for coil transient suppression. The hybrid Series 732TN relay has an internal silicon diode and transistor driver. The integrated packaging of the relay with its associated semiconductor devices greatly reduces PC board floor space requirements as well as component installation costs.

By virtue of its inherently low intercontact capacitance and contact circuit losses, the 732 relay has proven to be an excellent ultraminiature RF switch for frequency ranges well into the UHF spectrum. A typical RF application for the TO-5 relay is in handheld radio transceivers, wherein the combined features of good RF performance, small size, low coil power dissipation and high reliability make it a preferred method of Transmit-Receive switching (see Figure 1).

ENVIRONMENTAL AND PHYSICAL SPECIFICATIONS		
Temperature (Ambient)	**Storage**	–65°C to +125°C
	Operating	–55°C to +85°C
Vibration (General Note 1)		10 g's to 500 Hz
Shock (General Note 1)		30 g's, 6 msec, half-sine
Enclosure		Hermetically sealed
Weight		0.16 oz. (4.50g) max.

SPECIFICATIONS ARE SUBJECT TO CHANGE WITHOUT NOTICE
www.teledynerelays.com
©2009 TELEDYNE RELAYS

SERIES 732
GENERAL ELECTRICAL SPECIFICATIONS (@25°C) (Notes 2 & 3)

Contact Arrangement	2 Form C (DPDT)	
Rated Duty	Continuous	
Contact Resistance	0.15 ohm max. before life; 0.25 ohm max. after life at 1A/28Vdc (measured 1/8" from header)	
Contact Load Ratings (DC) (See Fig. 2 for other DC resistive voltage/current ratings)	Resistive: 1 Amp/28Vdc Inductive: 200 mA/28Vdc (320 mH) Lamp: 100 mA/28Vdc Low Level: 10 to 50 µs/10 to 50mV	
Contact Load Ratings (AC)	Resistive: 250 mA/115Vac, 60 and 400 Hz (Case not grounded) 100 mA/115Vac, 60 and 400 Hz (Case grounded)	
Contact Life Ratings	10,000,000 cycles (typical) at low level 1,000,000 cycles (typical) at 0.5A/28Vdc resistive 100,000 cycles min. at all other loads specified above	
Contact Overload Rating	2A/28Vdc Resistive (100 cycles min.)	
Contact Carry Rating	Contact factory	
Coil Operating Power	200 milliwatts typical at nominal rated voltage	
Operate Time	6.0 msec max. at nominal rated coil voltage	
Release Time	732: 3.0 msec max. 732D, 732TN: 7.5 msec max.	
Intercontact Capacitance	0.4 pf typical	
Insulation Resistance	1,000 megohms min. between mutually isolated terminals	
Dielectric Strength	Atmospheric pressure: 350 Vrms/60Hz	
Negative Coil Transient (Vdc)	732D, 732TN	2.0 max
Diode P.I.V. (Vdc)	732D, 732TN	60 min.
732TN Transistor Characteristics	**Base Voltage to Turn Off (Vdc)**	0.3 min
	Emitter-base breakdown Voltage (BV_{EBO}) (Vdc)	6.0 min
	Collector-base breakdown Voltage (BV_{CBO}) (@25°C & Ic = 100 µA) (Vdc)	60 min

DETAILED ELECTRICAL SPECIFICATIONS (@25°C) (Note 3)

BASE PART NUMBERS (See Note 8 for full P/N example)		**732-5 732D-5 732TN-5**	**732-6 732D-6 732TN-6**	**732-9 732D-9 732TN-9**	**732-12 732D-12 732TN-12**	**732-18 732D-18 732TN-18**	**732-26 732D-26 732TN-26**
Coil Voltage (Vdc)	Nom.	5.0	6.0	9.0	12.0	18.0	26.5
	Max.	7.5	10.0	15.0	20.0	30.0	40.0
Coil Resistance (Ohms ±20% @25°C) (732TN: See Note 4)		100	200	400	850	1600	3300
Pick-up Voltage (Vdc, Max.) Pulse Operated		3.5	4.5	6.8	9.0	13.5	18.0
732TN Base Current to Turn On (mAdc, Min.) (Note 5)		1.50	1.00	0.75	0.47	0.38	0.24

PERFORMANCE CURVES (Note 2)

TYPICAL RF PERFORMANCE

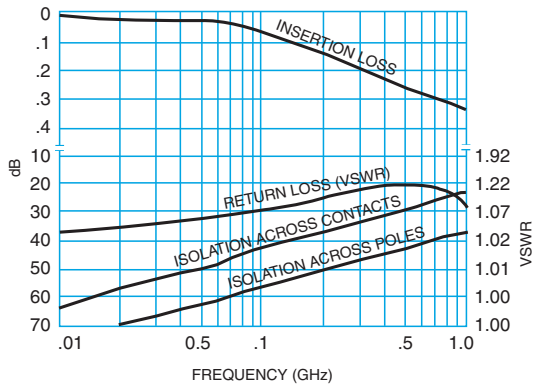

FIGURE 1

TYPICAL DC CONTACT RATING (RESISTIVE)

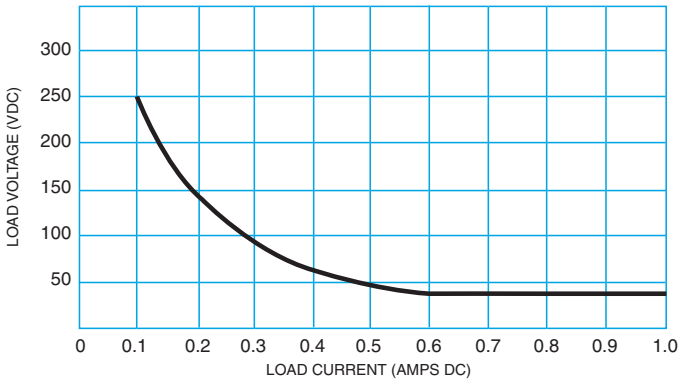

FIGURE 2

CENTIGRID® AND TO-5

SERIES 732

OUTLINE DIMENSIONS

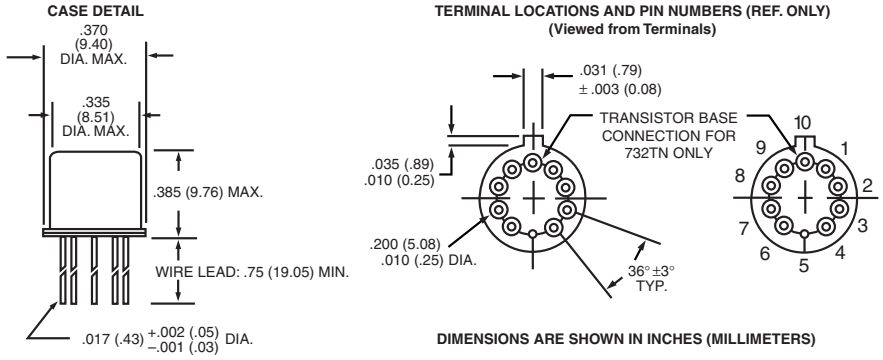

SCHEMATIC DIAGRAM

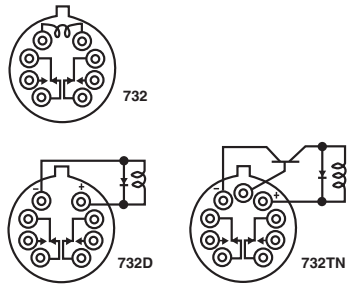

SCHEMATICS ARE VIEWED FROM TERMINALS

TYPICAL LOGIC INTERFACE

(See Note 5)

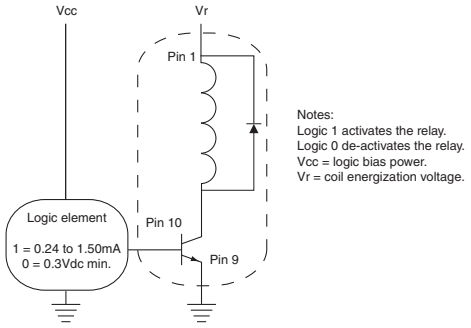

GENERAL NOTES

1. Relay contacts will exhibit no chatter in excess of 10 µsec or transfer in excess of 1 µsec.
2. "Typical" characteristics are based on available data and are best estimates. No on-going verification tests are performed.
3. Unless otherwise specified, parameters are intial values.
4. For Reference Only. Coil resistance not directly measurable on 732TN relays.
5. Circuit is typical for all Series 732TN. Values shown are for 732TN-5 relay and apply for full temperature range.Limit base-emitter current to 15 mADC.
6. Unless otherwise specified, relays will be supplied with either gold-plated or solder-coated leads.
7. The slash and characters appearing after the slash are not marked on the relay.
8.

Teledyne Part Numbering System for Commercial Relays

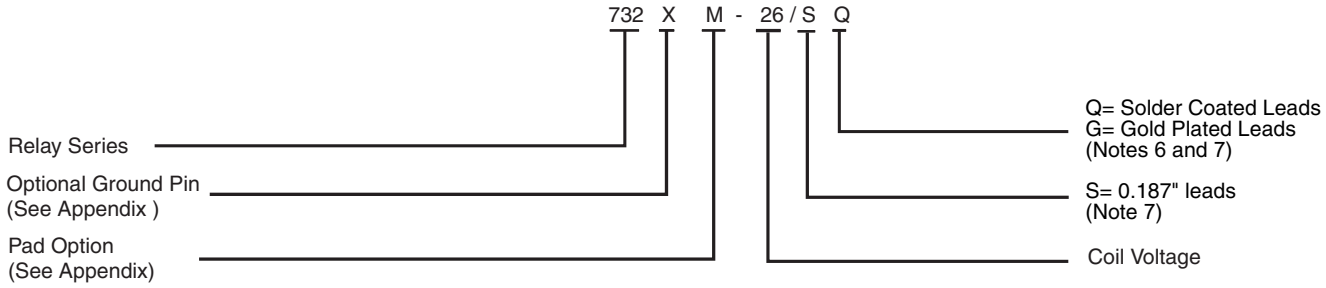

SPECIFICATIONS ARE SUBJECT TO CHANGE WITHOUT NOTICE
www.teledynerelays.com
©2009 TELEDYNE RELAYS