Potable Water Shock Arrestor

Potable water shock arrestors are designed to prevent water hammer.

Water hammer is caused by shock waves running through the water system which create noise or in severe cases pipe movement within a system, reverberations are a series of shock waves in quick succession. The pressure wave in such circumstances can be up to three times greater than the standing pressure. Water hammer occurs when the flow rate is suddenly changed, eg when a valve is quickly closed; quarter turn lever operated taps or solenoid valves are two of the main culprits. Reverberations occur when system components have moving parts, which respond to an initial shock wave by trying to open or close; an example of this is if there is a loose jumper on a stop tap.

The solution is to fit a shock arrestor directly before the affected fitting. Our shock arrestor is a mini expansion vessel, which works by absorbing the shock wave from the fitting so it does not travel through the system and cause a noise, the closer the shock arrestor is installed to the fitting the better.

Specifications

Maximum temperature	99°C
Minimum temperature	-10°C
Maximum working pressure	15 bar
Pre-set Pressure	5 bar

Materials

Shell	Stainless Steel
Membrane	EPDM
Clenched Flange	Stainless Steel

Approvals & Standards

WRAS Approved



Dimensions

Capacity (Ltr)	Pre-set Pressure (Bar)	Water Connection	H-Height (mm)	DØ-Diameter (mm)	Colour
0.16	5.0	½"mbsp	105mm	65mm	Silver

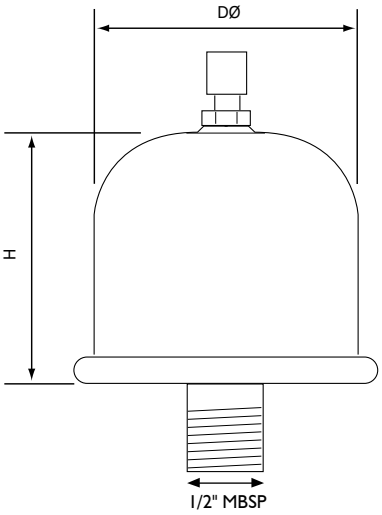

Product Range

XVES 050 000	0.16Ltr potable shock arrestor