Metrology- Univ. current/voltage transformer with ModBus RTU/RS485

Status: Available Data sheet created: 01.07.2025

Item Number: 2800100 - **Serie:** SensAct - **EAN:** 9008662014039



- Universal current / voltage converter
- universal converter input
- Analog and RS485 Modbus RTU interface
- RMS, AC and DC measurement
- Min / Max and average measurement
- Frequency and crest factor measurement
- Temperature and resistance measurement (PT100 or NTC).

Description

Precise and reliable reading of mechanical, electrical and electronic measured values with analogue and digital evaluation options.

General information

Short description	Univ. current/voltage converter with ModBus RTU/RS485
Item Number	2800100
EAN	9008662014039
Main category	Measurement Technology
Series	SensAct
Type	S1XMmM
Design	Installation design
Supply	10-30V DC

Ambient conditions and general specifications

Pollution degree	2, pollution level can be increased by installation in suitable enclosures (according to IEC 60664-1)

Logistics

Minimum Quantity	1
Tariff Number	85437090
EAN	9008662014039
Country of Origin	IT
Product Weight (g)	78

Available declarations / conformities

CE	✓
REACH	Open document
WEEE	Open document
TSCA	Open document
RoHs	Open document
CMRT	Open document

Further documents

MODBUS Register S1XMmxx	Download document

Software

SensAct-Software	Download software

CAD Files

STEP_S1XM_en.stp	Download file

Media & drawings



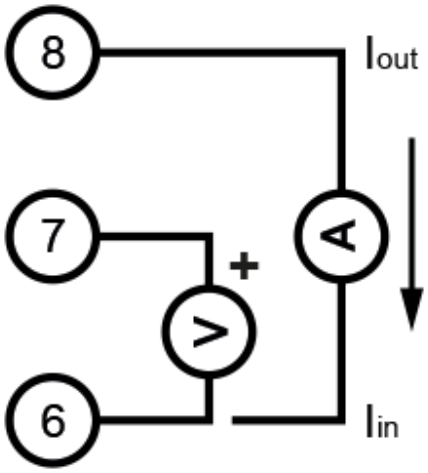

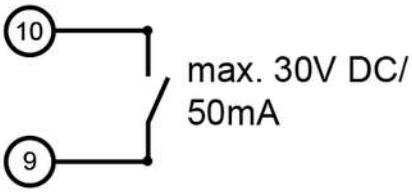

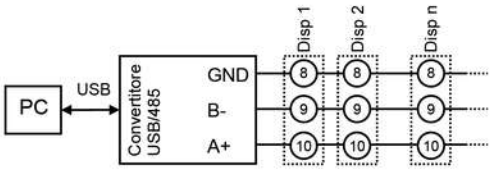

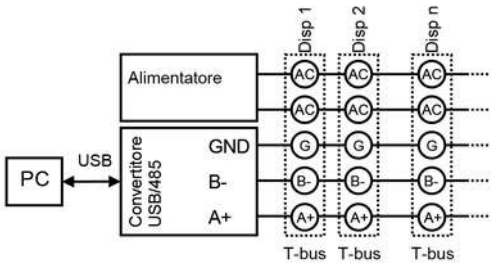

Tele Haase Steuergeräte Ges.m.b.H
Vorarlberger Allee 38
1230 Vienna
Austria

CALL US +43 / 1 / 614 74 - 0
ONLINE SUPPORT support@tele-haase.at

Changes and errors excepted