THE INFORMATION CONTAINED IN THIS DRAWING IS THE SOLE PROPERTY OF L-COM, INC. ANY REPRODUCTION IN PART OR WHOLE WITHOUT THE WRITTEN PERMISSION OF L-COM, INC. IS PROHIBITED.

REVISIONS			
REV	DESCRIPTION	DATE	APPROVED
A	INITIAL RELEASE	5/10/04	DFP
B	ECN 4308: ADDED VOLTAGE, AMPS & PACKAGING NOTES	10/12/09	D.FRISIELLO
C	ECN 5463: ADDED PANEL CUTOUT,UPDATED FORMAT	4/26/11	D. CASTRO

WIRING TABLE	
DB9 PIN #	TERMINAL BLOCK #
1	1
2	2
3	3
4	4
5	5
6	6
7	7
8	8
9	9
SHELL	SHL

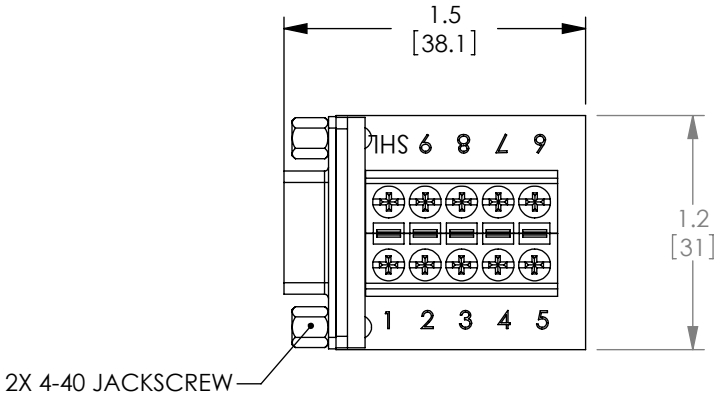

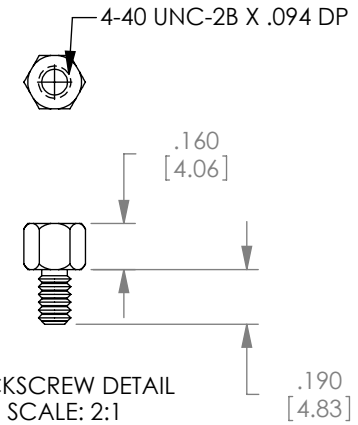

JACKSCREW DETAIL
SCALE: 2:1

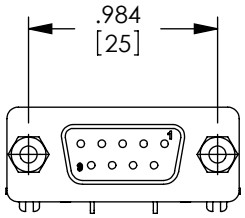

FEMALE, 9 CONTACT
D-SUB CONNECTOR

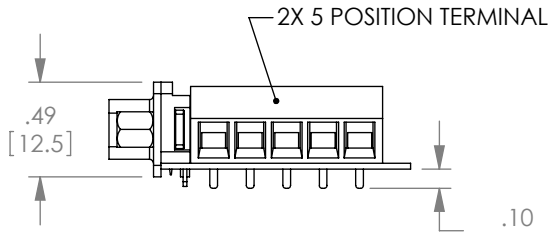

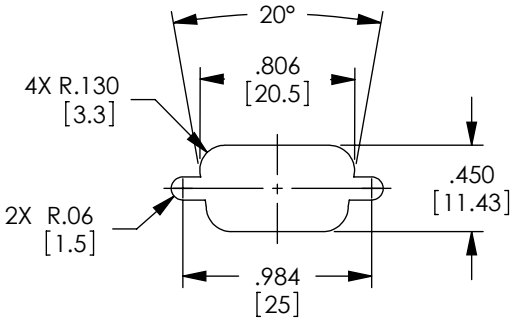

RECOMMENDED PANEL OPENING
(MAX PANEL THICKNESS: 0.06")

C

RoHS Compliant ✔

NOTES:

VOLTAGE RATING: 1000V AC & 500V DC.
CURRENT RATING: 3 AMPS

COMPONENT ASSEMBLY SHALL BE INDIVIDUALLY IN ACCORDANCE WITH L-COM SPECIFICATION PS-0031.

UNLESS OTHERWISE SPECIFIED,
DIMENSIONS ARE IN INCHES [mm]
OVERALL CABLE LENGTH TOLERANCE:
≤12 [305] = +1 [25] / -0
>12 [305] ≤60 [1524] = +2 [51] / -0
>60 [1524] ≤120 [3048] = +4 [102] / -0
>120 [3048] ≤300 [7620] = +6 [152] / -0
>300 [7620] = +5% / -0%
ALL OTHER DIMENSIONAL TOLERANCES:
.X = ± .2
.XX = ± .02
.XXX = ±.005
PROJECTION

APPROVALS	DATE
DRAWN BY D. PARHAM	4/28/2004
CHECKED BY T. CLARK	4/29/2004
APPROVED BY C. McCORMICK	5/7/2004

CONFIGURATION DETAILS OF UNDIMENSIONED FEATURES MAY VARY

COLOR VARIATIONS MAY OCCUR

L-COM Global Connectivity
45 BEECHWOOD DRIVE
NORTH ANDOVER, MA
01845

CATEGORY
DATA

PRODUCT DESCRIPTION
FIELD INSTALLABLE DB9

SIZE	FSCM NO.	DWG. NO.	REV.
A	43321	DGB9FT	C

SCALE: NONE | CAD FILE: DGB9FT.SLDDRW | SHEET 1 OF 1